GenRad

GR1687 Megahertz LC Digibridge™

Form 1687-0120-B

Instruction Manual

Contents

Specifications
Introduction — Section 1
Installation — Section 2
Operation — Section 3
Theory — Section 4
Service and Maintenance — Section 5
Parts Lists and Diagrams — Section 6

GR 1687 Megahertz LC Digibridge™

Form 1687-0120-B

©GenRad 1977

Concord, Massachusetts, U.S.A. 01742
April, 1978

Specifications

Parameters Measured: Series L and Q; series C and D; series C and R; and parallel C and G. All are key selectable.

Measurement Rates: Slow (2/s typical), fast (4/s typical). Key selectable. Refer to accuracy statements for speed/accuracy data.

Test Frequency: 1.000 MHz ±.01%

Measurement Ranges:

L = 00.001 to 99999 μH
C = 00.001 to 99999 pF
Q = 00.01 to 999.9
D = .0001 to 9.999
R = 00.01 Ω to 999.9 kΩ
G = 00.01 μS to 999.9 mS

Main Displays: Key selectable.

- Value: L/Q, C/D, C/R, C/G. Five full digits (99999) for L or C and four full digits (9999) for Q, D, R or G. Completely autoranging; decimal points and units included in display.
- Bin number: Identifies bin for tested component.
- Programmed limits for any bin.
- ΔL% or ΔC%: Percentage deviation of selected L or C measurement from stored nominal value.

Measurement Modes: Continuous, average (running average of 10 measurements), or single. Key selectable.

External Bias: Up to 60 V can be applied. On-off switch on keyboard; indicator shows when bias is applied. Bias source must be able to supply 15 mA dc with ripple less than 1 mV pk-pk. External discharge circuit recommended.

Applied Voltage: Nominal 0.1 V rms with 1687-9603 probe (supplied) or 1.0 V with -9604 probe (available). Actual voltage is nominal ±20% for high-Z DUT (C < 100 pF) and is loaded down by low-Z DUT (to 1/10 of nominal for C = 1600 pF).

Accuracy: These specifications apply when the standard 0.1-V probe (1687-9603) is used:

$$\text{L ACCURACY} = \underbrace{\pm 0.05\%M \left[3 + \frac{L}{500\ \mu H} + \frac{50\ \mu H}{L}\right]}_{\text{Basic L Accuracy}} \underbrace{\left[1 + 1/Q\right]}_{\text{Cross Term}}$$

$$\text{C ACCURACY} = \underbrace{\pm 0.05\%M \left[1 + \frac{C}{500\ pF} + \frac{50\ pF}{C}\right]}_{\text{Basic C Accuracy}} \underbrace{\left[1 + D\right]}_{\text{Cross Term}}$$

$$\text{Q ACCURACY} = \pm \left[.01 + .001M\ (1 + Q)\ Q\right] \left[\frac{\text{Basic L Accuracy}}{0.2\%}\right]$$

$$\text{D ACCURACY} = \pm .001M \left[1 + (1 + D)\ D\right] \left[\frac{\text{Basic C Accuracy}}{0.1\%}\right]$$

$$\text{R ACCURACY} = \pm 0.1\%M \left[1 + \frac{R}{6\ k\Omega} + \frac{150\ \Omega}{R}\right] \left[1 + 1/D\right]$$

$$\text{G ACCURACY} = \pm 0.1\%M \left[1 + \frac{G}{6\ mS} + \frac{150\ \mu S}{G}\right] \left[1 + 1/D\right]$$

These specifications apply when the optional 1-V probe (1687-9604) is used:

$$\text{L ACCURACY} = \pm 0.05\%M \left[7 + \frac{L}{500\ \mu H} + \frac{50\ \mu H}{L}\right] \left[1 + 1/Q\right]$$

$$\text{C ACCURACY} = \underbrace{\pm 0.05\%M \left[3 + \frac{C}{500\ pF} + \frac{50\ pF}{C}\right]}_{\text{Basic C Accuracy}} \underbrace{\left[1 + D\right]}_{\text{Cross Term}}$$

$$\text{Q ACCURACY} = \pm \left[.01 + .002M\ (1 + Q)\ Q\right] \left[\frac{\text{Basic L Accuracy}}{0.2\%}\right]$$

$$\text{D ACCURACY} = \pm .002M \left[1 + (1 + D)\ D\right] \left[\frac{\text{Basic C Accuracy}}{0.2\%}\right]$$

$$\text{R ACCURACY} = \pm 0.05\%M \left[3 + \frac{R}{3\ k\Omega} + \frac{300\ \Omega}{R}\right] \left[1 + 1/D\right]$$

$$\text{G ACCURACY} = \pm 0.05\%M \left[3 + \frac{G}{3\ mS} + \frac{300\ \mu S}{G}\right] \left[1 + 1/D\right]$$

In above specifications,

M = 1, for SLOW measurement rate
M = 5, for FAST measurement rate

$Q = \frac{2\pi fL}{R}$ for series L and R

$D = 2\pi fRC$ for series R and C

$D = \frac{G}{2\pi fC}$ for parallel G and C

f = 1 MHz

Accuracy specifications apply after warmup (0.5 hr) up to 1 year after full recalibration, provided that ambient temperature is within limits stated under "Environment," below, within ±5°C of temperature during previous open/short calibration, and within ±15°C of temperature during previous full recalibration.

Recalibrations: Semiautomatic; operator follows simple keyboard routines and connects known terminations as follows: for open/short recalibration, open and short circuits; for full recalibration, same and a 100-pF standard capacitor. Calibration kit recommended; see below.

Sorting: Limit comparator sorts vs a QDRG limit and up to 8 pairs of LC limits into 10 bins, conveniently defined by keyboard entries. GO/NO-GO is indicated, whether bin number or measured value is selected as main display.

Supplementary Displays: Modes, measurement rates, subject of main display, function, recalibration sequence. Indicators are labeled lights on keyboard.

Interface option: 2 ports (1 with choice of 2 modes); a 24-pin connector for each port. IEEE-488 INTERFACE PORT: Functions are SH1, AH1, T5, L4, SR1, RL2, PP0, DC0, DT1, C0. Refer to IEEE Standard 488-1975. Switch selection between 2 modes as follows. TALKER-LISTENER MODE: Input commands from system controller can disable keyboard and program all functions (except setting limits for sorting); any or all measurement results are available

as outputs. TALKER-ONLY MODE: Measured results are always output, for use in systems without controllers. HANDLER INTERFACE PORT: 1 input (start signal), 2 output (status signals), and set of 10 output lines (sorting data); active-low logic; for input, logic low is 0.0 to +0.4 V (current is 0.4 mA max) and logic high is +2.4 to +5.0 V; for outputs, open-collector drivers rated at +30 V max, 40 mA max (sink), each, this port only. (External power supply and pullup resistors are required.)

Environment: Operating: +0° to +50°C, 0 to 85% relative humidity. Storage: −40° to +75°C.

Supplied: 0.1-V measurement probe with cable (1687-9603), condensed operating instruction card, instruction manual, bias cable, and power cord for 125-V ac line.

Available: Test fixture, for axial- and radial-lead parts, Kelvin connections. 1-V measurement probe on plug-in cable. Calibration Kit (includes precision short-circuit termination, precision open-circuit termination, 100-pF coaxial capacitance standard, test-fixture adaptor, and carrying case). 1405-9700 1-pF Coaxial Capacitance Standard. 1687-9602 Reference Standard Adaptor for test fixture, to accept GR900®-series terminations and standards (included in -9605). Interface option (included in 1687-9701 or available separately). Replacement battery; (life expectancy in use is 5 years).

Power: 90 to 125 V or 180 to 250 V, 50 to 60 Hz. Either range selected by rear-panel switch. 36 W maximum.

Mechanical: Bench model.
Dimensions (wxhxd): 37.54x11.18x34.29 cm (14.78x4.4x13.5 in.).
WEIGHT: 6.2 kg (13.5 lb) net, 8.2 kg (18 lb) shipping.

Description	Catalog Number
1687 LC Digibridge	**1687-9700**
1687 LC Digibridge with Interface Option	**1687-9701**
1687-P1 Test Fixture	**1687-9600**
1687 1-V Measurement Probe/Cable	**1687-9604**
1687 Calibration Kit	**1687-9605**

Warranty

GenRad

We warrant that this product is free from defects in material and workmanship and, when properly used, will perform in accordance with applicable GenRad specifications. If within one year after original shipment it is found not to meet this standard, it will be repaired or, at the option of GenRad, replaced at no charge when returned to a GenRad service facility. Changes in the product not approved by GenRad shall void this warranty. GenRad shall not be liable for any indirect, special, or consequential damages, even if notice has been given of the possibility of such damages.

THIS WARRANTY IS IN LIEU OF ALL OTHER WARRANTIES, EXPRESSED OR IMPLIED, INCLUDING, BUT NOT LIMITED TO, ANY IMPLIED WARRANTY OF MERCHANTABILITY OR FITNESS FOR A PARTICULAR PURPOSE.

GenRad policy is to maintain product repair capability for a period of ten years after original shipment and to make this capability available at the then prevailing schedule of charges.

Table of Contents

Specifications

Warranty

Introduction — Section 1

1.1 Purpose 1-1
1.2 General Description 1-1
1.3 Controls, Indicators, and Connectors 1-3
1.4 Accessories 1-3

Installation — Section 2

2.1 Unpacking and Inspection 2-1
2.2 Dimensions 2-1
2.3 Power-Line Connection 2-1
2.4 Line-Voltage Regulation 2-2
2.5 Test-Fixture Connections 2-2
2.6 External Bias 2-2
2.7 Handler Interface (Option) 2-2
2.8 IEEE-488 Interface (Option) 2-3
2.9 Environment 2-7

Operation — Section 3

3.1 Basic Procedure 3-1
3.2 Connection of DUT 3-2
- Standard Probe 1687-9603 3-2
- Large-Signal Probe 1687-9604 3-2
- Use of Probe Nose 3-2
- Test Fixture 1687-9600 3-2
- Reference Standard Adaptor 1687-4600 . . 3-5
- User's Cables 3-5

3.3 Accuracy and Speed 3-6
3.4 Calibration 3-8
- Open/Short Calibration 3-8
- Full Recalibration 3-9
- Effective Capacitance of Coaxial Capacitors . 3-10
- Correction for Inductance of Short Circuit 3-11
- Power-Up Self-Check 3-11

3.5 Parameter and Mode 3-11
3.6 Limit-Comparison Bins 3-13
- Limit Entry Procedure 3-14
- Verification of Nominal and Limit Values . 3-15
- Percent-Difference — $\Delta C/\Delta L$ 3-15

3.7 Bias 3-15
3.8 Operation with a Handler 3-16
3.9 System Considerations 3-16
- IEEE-488 Interface Unused 3-16
- Talk-Only Use 3-16
- Talk/Listen Use 3-16

Theory — Section 4

4.1 Introduction 4-1
4.2 Principal Functions 4-3

Service and Maintenance — Section 5

5.1 Customer Service 5-2
5.2 Instrument Return 5-2
5.3 Repair and Replacement of Circuit Boards 5-2
5.4 Performance Verification 5-2
5.5 Minimum Performance Standards 5-3
- Full Recalibration and Capacitance Checks 5-4
- Accuracy Checks 5-5
- Limits-Entry and Keyboard Checks 5-6

5.6 Disassembly and Access 5-7
5.7 Periodic Maintenance 5-12
5.8 Trouble Analysis 5-14
- Power Supply 5-15
- Power-Up Self-Checks 5-15
- Test Signal Source 5-16
- Analog Front End 5-18
- Control Signal Checks 5-21
- Digital Circuitry 5-21
- Battery Replacement 5-21

Parts List and Diagrams — Section 6

6.1 General 6-1
6.2 Reference Designations 6-1
6.3 Diagrams 6-1

Figures 6-3 ... 6-7. Main Board, MB, 1687-4700 as follows:
- Digital Control Center Diagram 6-5
- Layout 6-6
- Analog Circuit Diagram 6-7
- Measurement Counter, Display Driver Diagram 6-9
- Keyboard and Display LED Interface Diagram . 6-11

Figure 6-9. Display Board Diagram 6-13
Figure 6-12. Keyboard Circuit Diagram 6-15
Figure 6-14. Interface Option Diagram 6-17
Figure 6-16. Power Supply Diagram 6-19
Figure 6-17. Test Fixture Diagram 6-20
Figure 6-19. Standard Probe Diagram 6-21

Introduction—Section 1

1.1 PURPOSE 1-1
1.2 GENERAL DESCRIPTION 1-1
1.3 CONTROLS, INDICATORS, AND CONNECTORS 1-3
1.4 ACCESSORIES 1-3

1.1 PURPOSE.

The 1687 1-MHz LC Digibridge™ is a digital impedance meter and limit comparator embodying use of a microprocessor and other LSI circuitry to provide convenience, speed, accuracy, and reliability at low cost. With the interface option, this Digibridge can control other equipment and respond to remote control.

The versatile probe, accessory test fixture, lighted keyboard, and angled display panel make this Digibridge convenient to use. Measurement results are clearly shown with decimal points and units, which are automatically presented to assure correctness. Display resolution is 5 digits for L and C (4 for Q, D, R, or G) and the basic accuracy is 0.1%.

Long-term accuracy and reliability are assured by the measurement system. It makes these accurate analog measurements without any critical internal adjustments. Calibration to account for any change of probe or test-fixture parameters is semiautomatic; the operator needs to provide only open-circuit and short-circuit conditions in the procedure.

The accessory test fixture, with a pair of plug-in adaptors, receives any common component part (axial-lead or radial-lead), so easily that insertion of the device under test (DUT) is a one-hand operation. True 4-terminal connections are made automatically.

Bias can be applied to capacitors being measured, by connection of an external voltage source and sliding a switch. Bias levels from 0 to 60 V are suitable.

The interface option provides full "talker/listener" and "talker only" capabilities consistent with the standard IEEE-488 Bus.* A separate connector also interfaces with component handling and sorting equipment.

1.2 GENERAL DESCRIPTION.

1.2.1 Basic Digibridge.

Convenience is enhanced by the arrangement of controls and auxiliary displays on the front ledge, with all controls for manual operation arranged in a small keyboard. Above and behind them, the display panel is inclined and recessed to enhance visibility of digital readouts and indicators. These indicators and those at the keyboard serve to inform and guide the operator as he manipulates the simple controls, or to indicate that remote control is in effect.

The instrument stands on a table or bench top. The sturdy metal cabinet is durably finished, in keeping with the long-life circuitry inside. Glass-epoxy circuit boards interconnect and support high-quality components to assure years of dependable performance.

Adaptability to any common ac power line is assured by the removable power cord and the convenient line-voltage switch. Safety is enhanced by the fused, isolating power transformer and the 3-wire connection.

1.2.2 Connections to the DUT.

The standard probe is supplied, with cable, to make 2-point connection to a component part or network to be measured. Connection is made by a pair of spring-loaded probe tips, which can be repositioned for a variety of terminal spacings. The probe is intended to be hand held and is most useful for measurement between nodes of a circuit board or terminals of a relatively large component part. Alternatively, the nose of the probe can be unplugged and set aside; then the probe-and-cable assembly will serve as a sophisticated cable that is used to connect to the test fixture described below. The entire probe-and-cable assembly can be unplugged from the Digibridge and replaced by another. In particular, the probe supplied with the instrument can be interchanged with an optional probe that has a higher test voltage.

The optional test fixture makes Kelvin connections directly on the wires of nearly any radial-lead or axial lead component part. This fixture is intended to stand on the bench near the Digibridge and to receive each part in such a way that insertion and removal are very simple one-handed operations. For radial-lead parts, the operator inserts each lead into a slot in the fixture. For axial-lead parts, an adaptor is first plugged into the fixture; then the operator slides the part between slotted posts so that each axial lead makes connection to a pair of hidden scissor-like blades.

1.2.3 Interface Option.

The interface option adds capabilities to the instrument,

*IEEE Standard 488-1975, Standard Digital Interface for Programmable Instrumentation. (See para 2.8, below.)

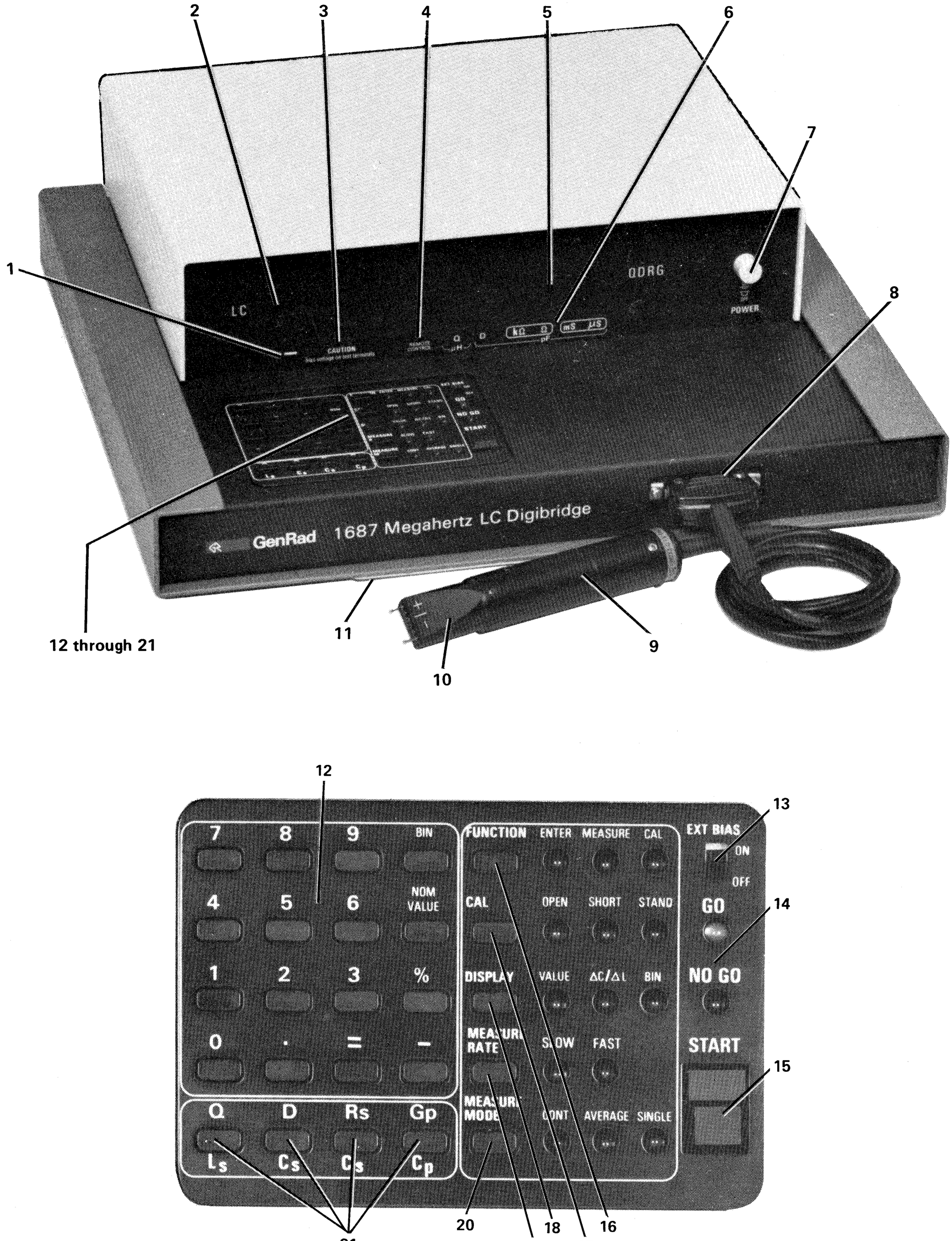

Figure 1-1. Front controls and displays. Upper picture, whole instrument; lower, keyboard detail.

1-2 INTRODUCTION

enabling it to control and respond to parts handling/sorting equipment. Also (via separate connector) this option can be connected in a measurement system using the IEEE-488 Bus. Either "talker/listener" or "talker only" roles can be performed by the Digibridge, by switch selection.

1.2.4 References.

A functional description is given in Theory, Section 4. Electrical and physical characteristics are listed in Specifications at the front of this manual; dimensions, in Installation, Section 2. Controls are described below; their use, in Operation, Section 3.

1.3 CONTROLS, INDICATORS, AND CONNECTORS.

Figure 1-1 shows the controls and indicators on the front of the instrument. Table 1-1 identifies them with descriptions and functions. Similarly, Figure 1-2 shows the controls and connectors on the rear; Table 1-2 identifies them.

1.4 ACCESSORIES.

GenRad makes several accessories that enhance the usefulness of this Digibridge. The test fixture accepts nearly all radial- and axial-lead parts conveniently; and it is necessary for full recalibration. (Refer to Section 3.) A special probe brings a high test voltage to the DUT (with or without use of the test fixture). The calibration kit is necessary for full recalibration, unless an equivalent set of terminations, capacitance standard, and reference-standard adaptor are at hand. (See para 3.4.) Refer to Table 1-3 in this manual and the brochure of Impedance Standards and Precision Bridges, available from GenRad upon request.

Table 1-1

FRONT CONTROLS, INDICATORS, AND CONNECTIONS

Fig. 1-1 Ref No.	Name	Description	Function
1	Negative LC indicator	Lighted "minus" sign.	When lit, indicates negative ΔC or ΔL (percent difference from nominal) or wrong choice of principal parameter, L or C.
2	LC display	Digital display, 5 numerals with decimal points. Units are labeled; see item 6.	Display of principal measured value: inductance or capacitance.
3	Bias indicator	Lighted sign: "CAUTION bias voltage on test terminals."	Light shines when bias voltage is present on probe, test fixture, DUT, etc. (See item 13.)
4	Remote control indicator	Lighted legend: REMOTE CONTROL.	Light shines when remote control is established by external command. Functions only if you have the interface option.
5	QDRG display	Digital display, 4 numerals with decimal points. Units are labeled; see item 6.	Display of secondary measured value: Q, D, resistance, or conductance.
6	Units display	Six-part lighted legend: μH/Q, pF/D, pF/kΩ, pF/Ω, pF/mS, pF/μS.	Indicates the parameters being measured and the correct units for the LC and QDRG displays.
7	POWER switch	Pushbutton (push again to release).	Turns instrument ON when in, OFF when out. OFF position breaks both sides of power circuit.
8	Test cable connector	Recessed 25-pin connector.	Receives 1687-family probe/cable connector for interface between instrument and DUT.
9	Probe	Hand-held probe with integral cable. Includes probe nose (item 10).	Probe-type 2-point contact to DUT. Alternatively (with nose unplugged) this interconnects test fixture with Digibridge.
10	Probe nose	Plug-in tip of probe, containing pair of spring-loaded contacts.	Interface between 2 contacts at DUT and multicontact (Kelvin) port of Digibridge.
11	Reference card	Captive pull-out card.	Handy reference information for basic operation, limit entry, and programming.

Table 1-1

FRONT CONTROLS, INDICATORS, AND CONNECTIONS (CONTINUED)

Fig. 1-1 Ref No.	Name	Description	Function
12	Limit-entry keys	Group of 16 keys with numbers and other labels.	Manual entry of limits that define go/no-go categories and 10 bin assignments, and selection of limit displays on items 2 and 5. Except for = and NOM VALUE, these keys are functional only if ENTER has been selected by item 16.
13	EXT BIAS switch	Slide switch, 2 positions: ON, OFF.	To connect and disconnect the external bias circuit. See item 3. Use an external switch routinely to apply bias and to discharge capacitors.
14	GO/NO-GO lights	LED indicator lights, green and red.	GO means measured value is acceptable, based on limits stored by item 12. NO-GO means unacceptability of principal or secondary measurement, or both.
15	START button	Pushbutton switch.	Start measurement sequence. (Normally used when measurement mode is either SINGLE or AVERAGE; see item 20.)
16 | 20	(See below.)	Set of 5 keys with associated indicator lights at right.	Selection of indicated function, accomplished by pressing key repeatedly (causing corresponding indicators to cycle through the available possibilities) until the desired choice is lit.
16	FUNCTION key	Indicators: ENTER, MEASURE, CAL.	ENTER enables entry and display of limits. MEASURE enables measurements of the DUT and use of NOM VALUE key to store previous measurement for percent-difference reference. CAL enables calibration sequence. (See item 17.)
17	CAL key	Indicators: OPEN, SHORT, STAND.	Provides for some of the necessary inputs from operator during calibration sequences.
18	DISPLAY key	Indicators: VALUE, ΔC/ΔL, BIN.	Selection of the information that will be shown in the LC and QDRG displays after the completion of each measurement, if item 16 is set to MEASURE. Also effective in CAL but not in ENTER function.
19	MEASURE RATE key (RATE key)	Indicators: SLOW, FAST.	Selection of measurement speed as indicated. (Accuracy is best with SLOW.)
20	MEASURE MODE key (MODE key)	Indicators: CONT, AVERAGE, SINGLE.	Selection of mode if item 16 is set to MEASURE or CAL. (Ineffective otherwise.) CONT = continuous repetitive measurements. AVERAGE = a sequence of 10 measurements initiated by item 15, with displays being the average values of the preceding measurements since "start." SINGLE = one measurement, initiated by item 15.
21	Parameter keys	Set of 4 keys, labeled: Ls/Q, Cs/D, Cs/Rs, Cp/Gp.	Selection of the parameters to be measured (4 possibilities). Also, during ENTER function, repeated pushing of either 3rd or 4th key selects measurement units (for limits), as displayed by item 6.

1-4 INTRODUCTION

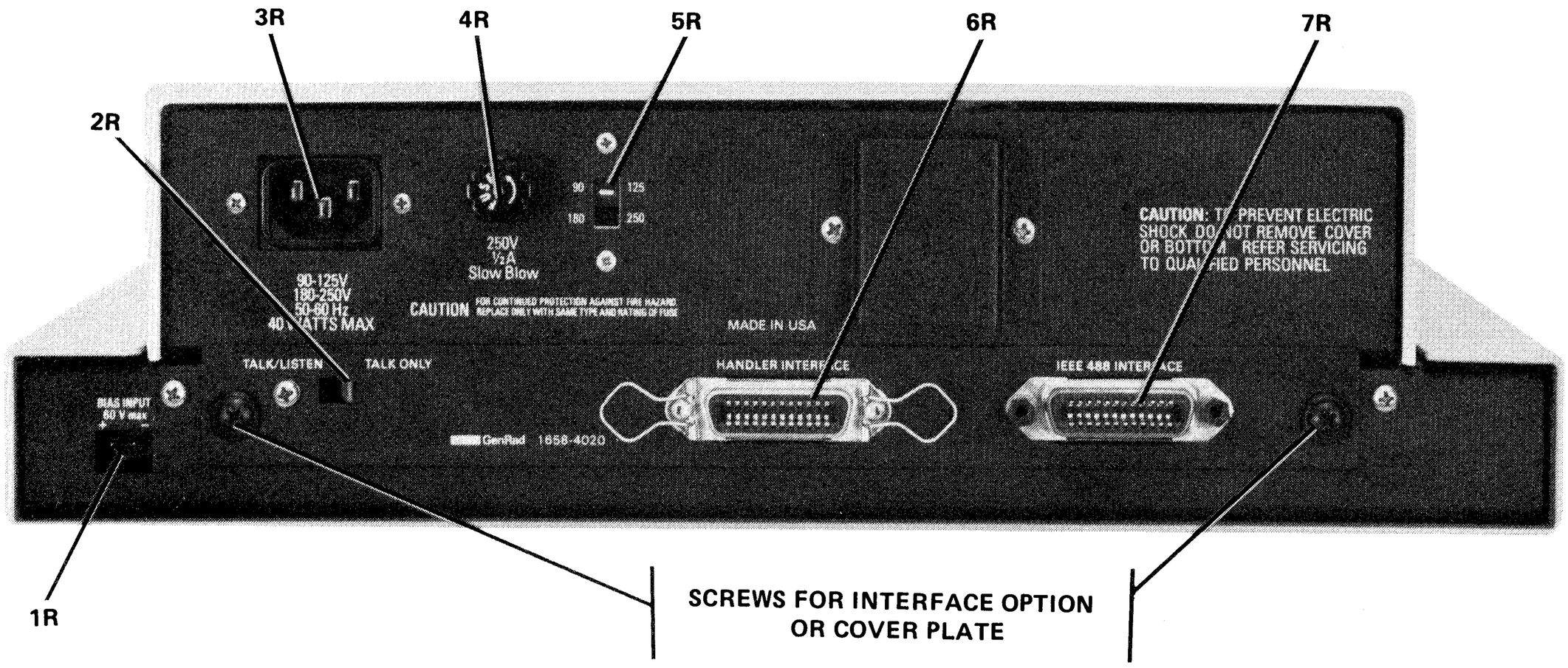

Figure 1-2. Rear controls and connectors.

Table 1-2

REAR CONNECTORS AND CONTROLS

Fig. 1-2 Ref No.	Name	Description	Function
1R	BIAS INPUT connector	Recessed plug, 2-pin. Labeled: 60 V max, +, –, (rear view).	Connection of external voltage source for biasing capacitors via test fixture. Observe instructions in para 2.6.
2R	TALK switch*	Toggle switch	Selection of mode for IEEE-488 interface: TALK/ LISTEN or TALK ONLY, as labeled.
3R	Power connector (labeled 50-60 Hz)	Safety shrouded 3-wire plug, conforming to International Electrotechnical Commission 320.	AC power input. Use appropriate power cord, with Belden SPH-386 socket or equivalent. The GenRad 4200-9625 power cord (supplied) is rated for 125 V.
4R	Fuse (labeled 250 V, 0.5 A, SLOW BLOW)	Fuse in extraction post holder.	Short circuit protection. Use Bussman type MDL or equivalent fuse, 1/2 A, 250 V rating.
5R	Line-voltage switch	Slide switch. Upper position, 90 to 125 V; lower position, 180 to 250 V.	Adapts power supply to line-voltage ranges, as indicated. To operate, use small screwdriver, not any sharp object.
6R	HANDLER INTERFACE connector*	Socket, 24-pin; receives Amphenol "Microribbon" plug P/N 57-30240 (or equivalent).	Connections to component handler (bin numbers and status, out; "start," in).
7R	IEEE-488 INTERFACE connector*	Socket, 24-pin. Receives IEEE-488 interface cable (see para 2.8).	Input/output connections according to IEEE Std 488-1975. Functions: complete remote control, output of all display values.

*TALK switch and 24-pin connectors are supplied with the Interface Option only.

Table 1-3

ACCESSORIES

Quantity	Description	GR Part Number
1 supplied	Power cord, 210 cm (7 ft) long, 3-wire AWG No. 18, with molded connector bodies. One end, with Belden SPH-386 socket, fits instrument. Other end is stackable (hammerhead) conforming to ANSI standard C73.11-1966 (125 V max).	4200-9625
1 supplied	Bias cable, 120 cm (4 ft) long, 2 wire. One end fits BIAS INPUT connector. Other end has stackable banana plugs (black, red).	1658-2450
1 supplied	0.1-V Measurement probe with cable	1687-9603
1 recommended	1-V Measurement probe with cable	1687-9604
1 recommended	Test fixture for axial- and radial-lead parts. Kelvin connections. (Includes the following.) Axial-lead adaptor for test fixture	1687-9600 1687-4100
1 recommended	Calibration kit, for use with test fixture. (Includes the following in a case.) Reference standard adaptor Coaxial capacitance standard, 100 pF Precision open-circuit termination Precision short-circuit termination	1687-9605 1687-9602 1406-9704 0900-9981 0900-9971
1 recommended	Coaxial capacitance standard, 1 pF	1405-9700
1 available	Interface option (included in 1687-9701)	1687-4020
1 available	Rack mount kit (slides forward for complete access)	1657-9000
1 replacement	Probe nose (part of 1687-9603 or -9604)	1687-9606
1 replacement	Battery (Note: shelf life, 10 years, life in instrument, 5 to 10 years. Refer to para 3.4.6)	8410-3480*

*Use one of the following if available: P/N LO-32 (Mallory Battery Co., S. Broadway, Tarrytown, N.Y. 10591), P/N 440S (Power Conversion, Inc., 70 MacQuesten Pkwy S., Mount Vernon, N.Y. 10550), or P/N LR-2/3A (Matsushita Electric Corp. of America, 1 Panasonic Way, Secaucus, N.J. 07094).

1-6 INTRODUCTION

Installation—Section 2

2.1 UNPACKING AND INSPECTION 2-1
2.2 DIMENSIONS 2-1
2.3 POWER-LINE CONNECTION 2-1
2.4 LINE-VOLTAGE REGULATION 2-2
2.5 TEST-FIXTURE CONNECTIONS 2-2
2.6 EXTERNAL BIAS 2-2
2.7 HANDLER INTERFACE (OPTION) 2-2
2.8 IEEE-488 INTERFACE (OPTION) 2-3
2.9 ENVIRONMENT 2-6

2.1 UNPACKING AND INSPECTION.

If the shipping carton is damaged, ask that the carrier's agent be present when the instrument is unpacked. Inspect the instrument for damage (scratches, dents, broken parts, etc.). If the instrument is damaged or fails to meet specifications, notify the carrier and the nearest GenRad field office. (See list at back of this manual.) Retain the shipping carton and the padding material for the carrier's inspection.

2.2 DIMENSIONS.

Figure 2-1.

The instrument is supplied in a bench configuration, i.e., in a cabinet with resilient feet for placement on a table. Overall dimensions are given in the figure.

2.3 POWER-LINE CONNECTION.

The power transformer primary windings can be switched, by means of the line voltage switch on the rear panel, to accommodate ac line voltages in either of 2 ranges, as labeled, at a frequency of 50 or 60 Hz, nominal. Using a small screwdriver, set this switch to match the measured voltage of your power line.

If your line voltage is in the lower range, connect the 3-wire power cable (P/N 4200-9625) to the power connector on the rear panel and then to the power line.

The instrument is fitted with a power connector that is in conformance with the International Electrotechnical Commission publication 320. The 3 flat contacts are surrounded by a plastic shroud that reduces the possibility of electrical shock whenever the power cord is being unplugged from the instrument. In addition, the center ground pin is longer, which means that it mates first and disconnects last, for user protection. This panel connector is a standard 3-pin grounding-type receptacle, the design of which has been accepted world wide for electronic instrumentation. The connector is rated for 250 V at 6 A. The receptacle accepts power cords fitted with the Belden type SPH-386 connector.

The associated power cord for use with that receptacle, for line voltages up to 125 V, is GenRad part no. 4200-9625. It is a 210-cm (7 ft), 3-wire, 18-gage cable with connector bodies molded integrally with the jacket. The connector at the power-line end is a stackable hammerhead design that conforms to the "Standard for Grounding Type Attachment Plug Caps and Receptacles," ANSI C73.11-1966, which specifies limits of 125 V and 15 A. This power cord is approved for 125 V, 10 A, by Underwriters Laboratories, Inc.

If your power line voltage is in the higher range (up to 250 V), be sure to use a power cord that is approved for 250 V. The end that connects to the Digibridge should have

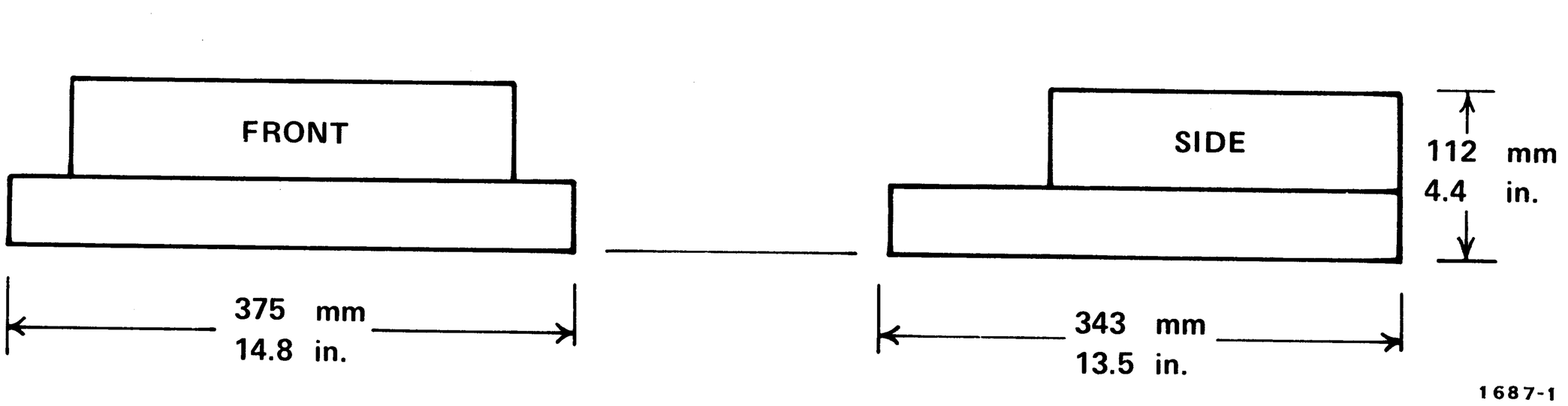

Figure 2-1. Overall dimensions.

a connector of the type that is on the power cord supplied; the other end, an approved connector to mate with your standard receptacle. A typical configuration for a 250-V, 15-A plug is illustrated in Figure 2-2.

If the fuse must be replaced, be sure to use a "slow blow" fuse of the current and voltage ratings shown on the rear panel, regardless of the line voltage.

2.4 LINE-VOLTAGE REGULATION.

The accuracy of measurements accomplished with precision electronic test equipment operated from ac line sources can often be seriously degraded by fluctuations in primary input power. Line-voltage variations of ±15% are commonly encountered, even in laboratory environments. Although most modern electronic instruments incorporate some degree of regulation, possible power-source problems should be considered for every instrumentation setup. The use of line-voltage regulators between power lines and the test equipment is recommended as the only sure way to rule out the effects on measurement data of variations in line voltage.

2.5 TEST-FIXTURE CONNECTIONS.

An unusually versatile test fixture is available for this instrument and easily connected via the probe cable supplied. To connect common axial-lead or radial-lead component parts to be measured, you simply plug the device to be measured (DUT) into the test fixture, with or without its adaptors. For details, refer to para 3.2.

2.6 EXTERNAL BIAS.

WARNING

- **Maximum bias voltage is 60 V. Do NOT exceed.**
- **Bias voltage is present at connectors, test fixtures, and on capacitors under test.**
- **Capacitors remain charged after measurement.**
- **Do not leave instrument unattended with bias applied.**

Full bias voltage appears on test leads, bias-voltage source terminals, and on the leads of the DUT. Capacitors that have been measured with bias applied can be dangerous until properly discharged, if several of them become connected in series by chance contact. For safety, all personnel operating the instrument with bias must be aware of the hazards, follow safe procedures, and remove bias before leaving the equipment unattended. Refer to para 3.7.

In order to measure a capacitor with dc bias voltage applied, connect an external voltage source as follows.

Supply the desired dc voltage well filtered and current limited at 15 mA to 200 mA (max).

a. Plug the bias cable, supplied, into the BIAS connector, at the rear. The plug is keyed to enter the socket so that the red-tipped wire connects to the + pin (as labeled at the BIAS connector).

b. Connect the black and red tips to the external bias supply – and + terminals, respectively.

An external discharge circuit is recommended, to reduce wear of the EXT BIAS switch of the Digibridge. If more than 30 V is sometimes used, a dual discharge circuit is recommended, as follows. One (to be used first) should have a 10-ohm resistor in series; the other (as a backup) should make a direct connection across the bias circuit.

If the measurement program warrants the expense of a remote test fixture (perhaps in conjunction with a handler), for biased capacitor measurements, it should be provided with the kind of circuit described above. It should have convenient switching to remove the bias source, to discharge through 10 ohms, and finally to short out the capacitor after measurement. For automated test setups, it is also feasible to precharge the capacitors before attachment to the test fixture and to discharge them after they have been removed. The equipment should be designed to safeguard personnel from electrical shock and adjusted to avoid the passage of large transient currents through the test fixture.

2.7 HANDLER INTERFACE (OPTION).

If you have the interface option, connect from the HANDLER INTERFACE on the rear panel to a handler,

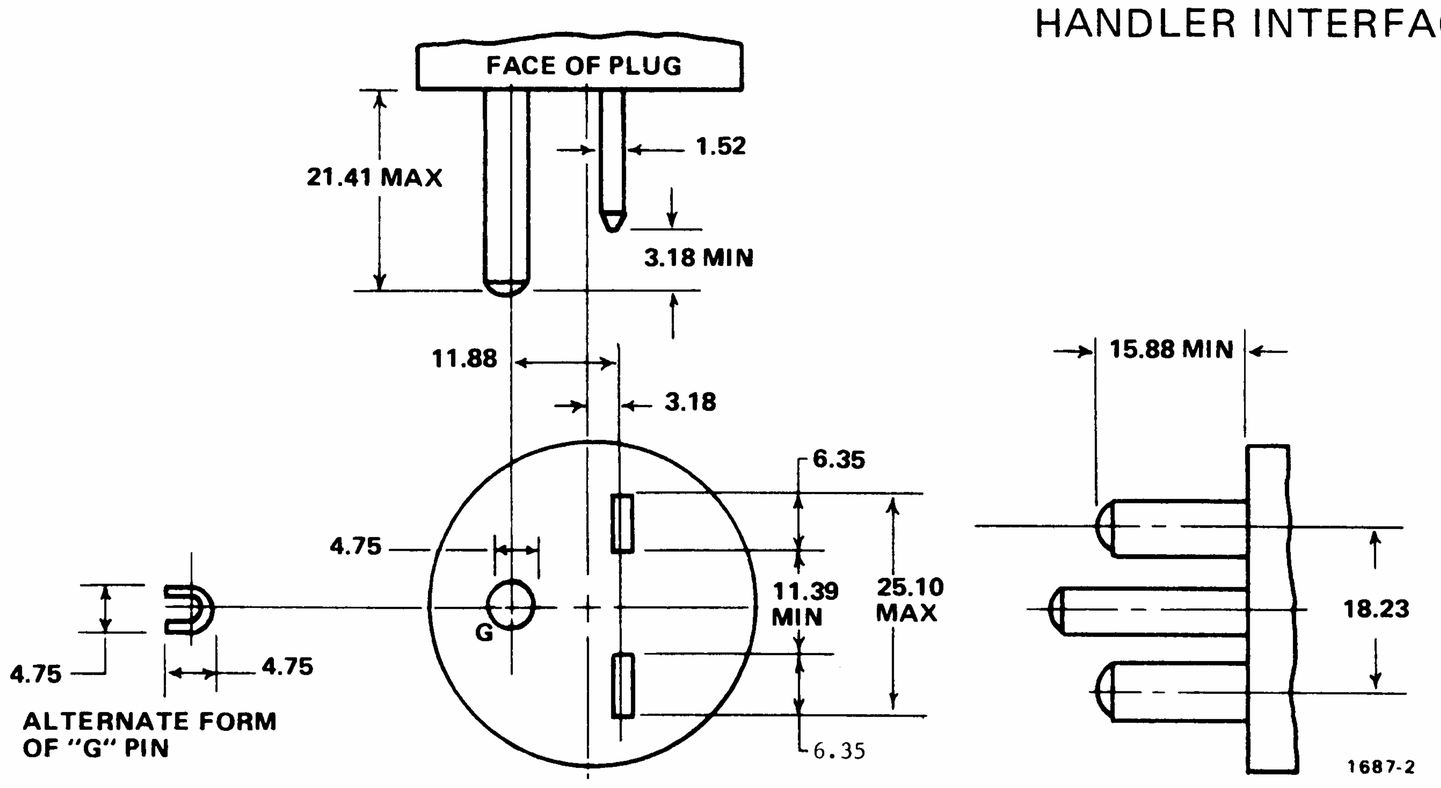

Figure 2-2. Configuration of 250-V, 15-A plug. Dimensions in mm. This is listed as NEMA 6-15P. Use for example Hubbell plug number 5666.

printer, or other suitable peripheral equipment as follows. (The presence of the 24-pin connectors, shown in Figure 1-2, verifies the interface option.) Refer to Table 1-2 for the appropriate connector to use in making a cable. Refer to Table 2-1 for the key to signal names, functions, and pin numbers.

Table 2-1

HANDLER INTERFACE KEY

Pin No.	Signal Name	Function (All Signals "Active Low")
5, 6, 7	——	Ground connection.
10	——	Plus 5 V, if internal jumper in place. (Limit current to 250 mA.)
		INPUT:
1	START	Initiates measurement (single or avg).
		OUTPUTS:
18	EOT	"End of test"; bin signals are valid.
22	ACQ OVER	"Data acquisition over"; DUT removal OK.
15	BIN 0	No-go because of QDRG limit.
17	BIN 1	Go, bin 1
19	BIN 2	Go, bin 2.
21	BIN 3	Go, bin 3.
23	BIN 4	Go, bin 4.
14	BIN 5	Go, bin 5.
16	BIN 6	Go, bin 6.
20	BIN 7	Go, bin 7.
24	BIN 8	Go, bin 8.
13	BIN 9	No-go by default (suits no other bin).

As indicated in the Specifications at the front of this manual, the output signals come from open-collector drivers that pull each signal line to a low voltage when that signal is active and let it float when inactive. Each external circuit must be powered by a positive voltage, up to 30 V (max), with sufficient impedance to limit the active-signal (logic low) current to 40 mA (max).

CAUTION

Provide protection from voltage spikes over 30 V.

The cautionary note above means typically that each relay or other inductive load requires a rectifier across it (cathode connected to the power-supply end of the load).

The input signal is also active low and also requires a positive-voltage external circuit, which must pull the signal line down below +0.4 V but not less than 0 V (i.e., not negative). The logic-low current is 0.4 mA (max). For the inactive state (logic high), the external circuit must pull the signal line above +2.4 V, but not above +5 V.

Refer to Figure 2-2A for timing guidelines. Notice that START must have a duration of 1 μs (minimum) in each state (high and low). If START is provided by a mechanical switch without debounce circuitry, the Digibridge will make many false starts; but these will not cause extraneous test-result signals if START is made to settle down (low) within 20 ms (maximum) of the first transition to high.

Measurement starts at time d, which is essentially the same as time b or c; measurement is completed at e. (The START signals are expanded for clarity.) Interval d-e, during which the DUT must remain connected, is 150 ms for FAST or 300 ms for SLOW MEASURE RATE. After interval e-f, which is 50 ms, measurement results are available for sorting, i.e., one of the BIN lines goes low. A few microseconds later, EOT goes low (can be used to set a latch holding the bin assignment). ACQ OVER, the selected BIN line, and EOT then stay low until the next start command.

Be sure the TALK switch is set to TALK ONLY, if the IEEE-488 bus is not used.

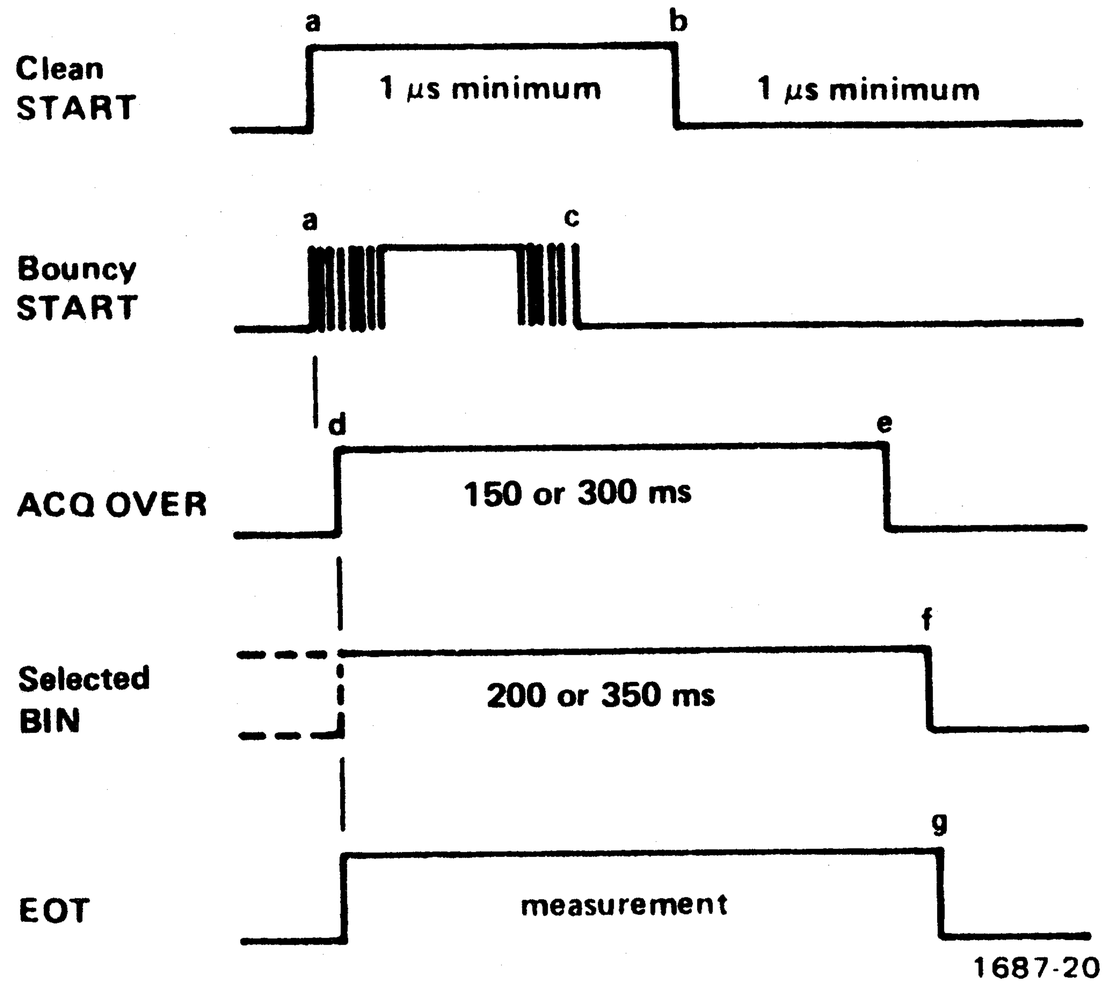

Figure 2-2A. Handler interface timing diagram. External circuitry must keep a—b > 1 μs, b—a > 1 μs, and (if START is not "debounced") a—c < 20 ms. The DUT can be disconnected after "e." The selected "BIN" line goes low at "f"; the others stay high.

2.8 IEEE-488 INTERFACE (OPTION).

Refer to CAUTION on page 3-16.

2.8.1 Purpose. **Figure 2-3.**

If you have the interface option, you can connect this instrument into a system (containing a number of devices such as instruments, apparatus, peripheral devices, and generally a controller or computer) in which each component meets IEEE Standard 488-1975, Standard Digital Interface for Programmable Instrumentation. A complete understanding of this Standard (about 80 pages) is necessary to understand in detail the purposes of the signals at the IEEE-488 INTERFACE connector at the rear panel of this instrument. Commendable introductions to the Standard and its application have been published separately, for example: "Standard Instrument Interface Simplifies System Design," by Ricci and Nelson, *Electronics,* Vol 47, No. 23, November 14, 1974.

NOTE

For copies of the Standard, order "IEEE Std 488-1975, IEEE Standard Digital Interface for Programmable Instrumentation," from IEEE Service Center, Department PB-8, 445 Hoes Lane, Piscataway, N.J. 08854.

Each device is connected to a system bus, in parallel, usually by the use of several stackable cables. Refer to the figure for a diagram of a hypothetical system. A full set of connections is 24 (16 signals plus shield and ground returns), as tabulated below and also in the Standard. Suitable cables, stackable at each end, are available from Component Manufacturing Service, Inc., West Bridgewater, MA 02379, U.S.A. (Their part number 2024/1 is for a 1-meter-long cable.)

This instrument will function as either a TALK/LISTEN or a TALK ONLY device in the system, depending on the position of the TALK switch. "TALK/LISTEN" denotes full programmability and is suited for use in a system that has a controller or computer to manage the data flow. The "handshake" routine assures that the active talker proceeds slowly enough for the slowest listener that is active, but is not limited by any inactive (unaddressed) listener. TALK ONLY is suited to a simpler system — e.g., Digibridge and printer — with no controller and no other talker. Either mode provides measurement results to the active listeners in the system.

2.8.2 Interface Functions.

The following functions are implemented. Refer to the Standard for an explanation of the function subsets, represented by the identifications below. For example, T5

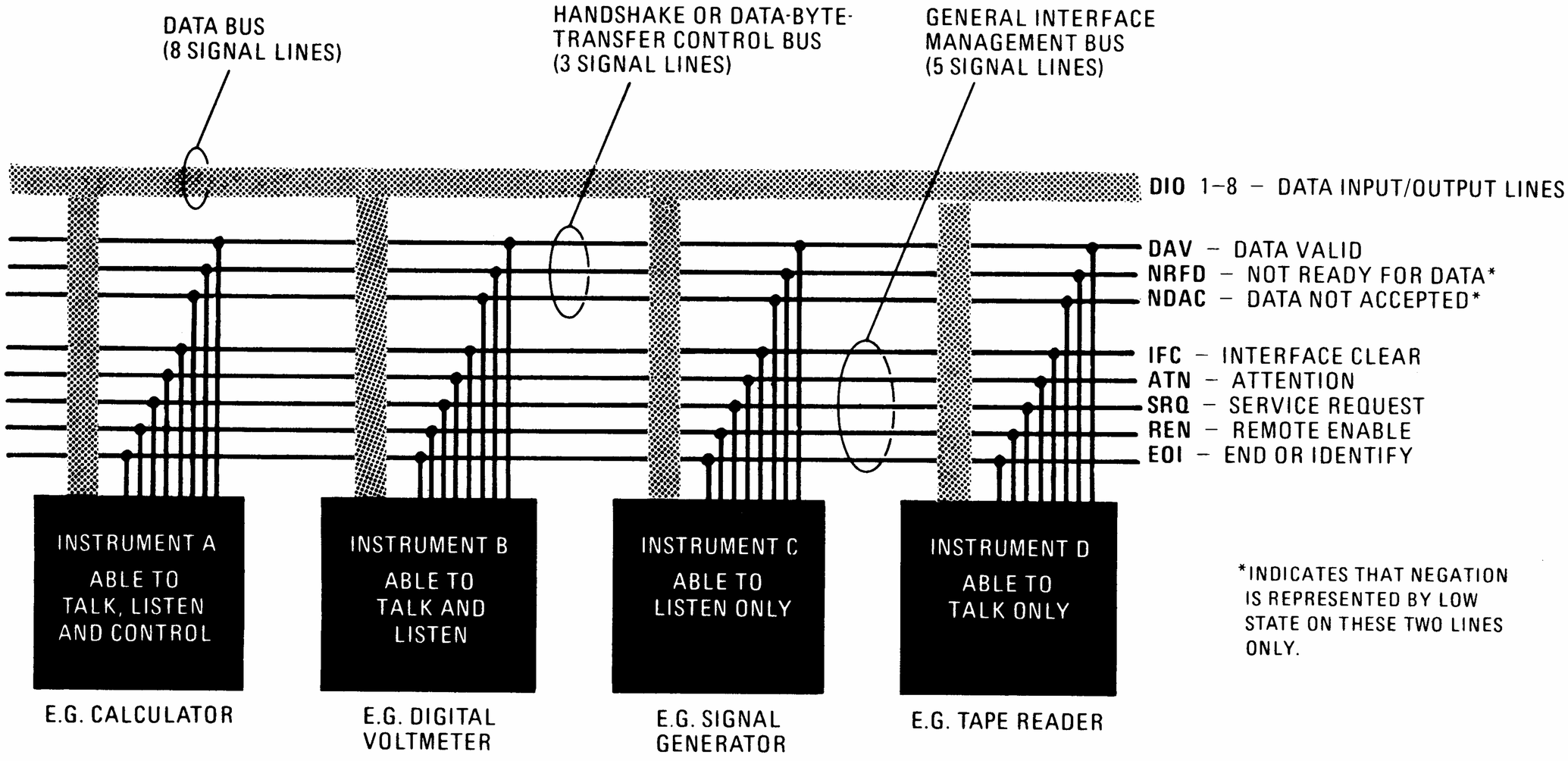

Figure 2-3. Block diagram of a generalized system interconnected by the 16-signal-line bus specified in the IEEE Standard 488. Reprinted from *Electronics*, November 14, 1974; copyright McGraw Hill, Inc., 1974.

represents the most complete set of talker capabilities, whereas PP0 means the absence of a capability.

SH1, source handshake (talker)

AH1, acceptor handshake (listener)

T5, talker (full capability, serial poll)

L4, listener (but not listen-only)

SR1, request by device for service from controller

RL2, remote control (no local lockout, no return-to-local switch)

PP0, no parallel poll

DC0, no device clear

DT1, device trigger (typically starts measurement)

C0, no controller functions.

The handshake cycle is the process whereby digital signals effect the transfer of each data byte by means of status and control signals. The cycle assures, for example, that the data byte has settled and all listeners are ready before the talker signals "data valid." Similarly, it assures that all listeners have accepted the byte before the talker signals "data not valid" and makes the transition to another byte. Three signal lines are involved, in addition to the 8 that convey the byte itself. Refer to Figure 2-4.

2.8.3 Signal Identification.

Refer to Table 2-2 for a key to signal names, functions, and pin numbers. Further explanation is found in the Standard. The first three signals listed take part in the "handshake" routine, used for any multiline message via the data bus; the next five are used to manage the flow of information; the last eight constitute the multiline message data bus.

2.8.4 Codes and Addresses.

The device-dependent messages, such as instrument programming commands and measurement data (which the digital interface exists to facilitate), have to be coded in a way that is compatible between talkers and listeners. They have to use the same language. Addresses have to be assigned, except in the case of a single "talker only" with one or more "listeners" always listening. The Standard sets ground rules for these codes and addresses.

In this instrument, codes for input and output data have been chosen in accordance with the rules. The address (for both talker and listener functions) is user selectable, as explained below.

Instrument Program Commands. Refer to Table 2-3. This input data code is a set of commands to which the instrument will respond as a "talker/listener," after being set to a remote code and addressed to listen to device-dependent command strings.

Notice that the set includes all the keyboard functions except entry of limits, which are not remotely programmable. Also, some of the remote-control commands have no manual-control equivalents. Data output commands enable selection of specific classes of measurement results, independently from the actual displays.

Each command is 2 bytes; each byte is coded according to the 7-bit ASCII code, using the DI01. . .DI07 lines.* The most significant bit is DI07, as recommended by the

*"X3.4-1968, Code for Information Interchange," available from American National Standards Institute, 1430 Broadway, New York, N.Y. 10018.

2-4 INSTALLATION

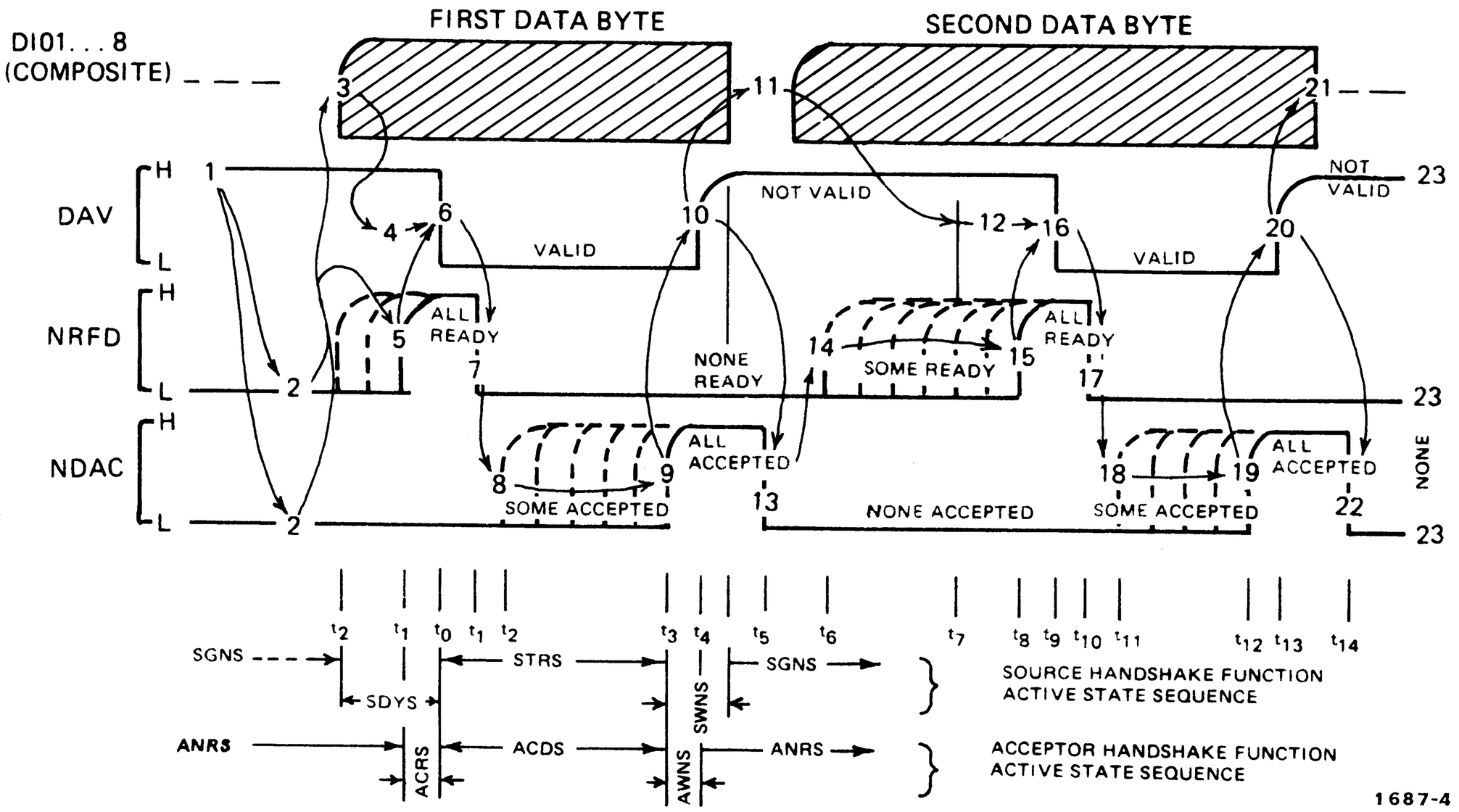

Figure 2-4. The handshake process, illustrated by timing diagrams of the pertinent signals for a system with one talker and several listeners. For details, refer to the Standard.

Standard. Thus, for example, the command for "Measure" is F1, having octal code 106 061. The 7-bit binary bytes are therefore: 1 000 110 and 0 110 001. (The ASCII code can be written out as follows. For the numerals 0, 1, 2. . .9, write the series of octal numbers 060, 061, 062 . . . 071; for the alphabet A, B, C . . . Z, write the series 101, 102, 103 . . . 132. Refer also to the table in the paragraph about "Address," below. The ASCII code conforms to the 7-bit code ISO 646 used internationally.) Notice that the eighth bit (DI08) is ignored.

Address. The initial setting of address, provided by the factory, is binary 00011. Consequently, the talk-address command (MTA) is C in ASCII code and, similarly, the listen-address command (MLA) is #. If a different address pair is desired, set it manually, using the following procedure.

WARNING

Because of shock hazard and presence of electronic devices subject to damage by static electricity (conveyed by hands or tools), disassembly is strictly a "service" procedure.

a. Take the instrument to a qualified electronic technician who has the necessary equipment; refer to para 5.6. Have him remove the interface option assembly, as described in that paragraph. (There is no need to remove the top cover first.)

b. Have him set the switches in "DIP" switch assembly S2 to the desired address, which is a 5-bit binary number. (Refer to the comments below.)

c. Have him replace the interface option assembly in its former place.

Notice that S2 is located at the end of the interface option board, about 3 cm (1 in.) from the TALK switch S1. If S2 is covered, lift the cover off, exposing the "DIP" switch, which has 2 rows of 6 tiny square pads with numbers 1 . . . 6 between the rows. To enter logical 1's, depress pads nearest the end of the board. To enter logical 0's, depress pads on the other side of the "DIP" switch, the side marked with a + sign. The address is read from 5 to 1 (not using 6). Thus, for example, to set up the address 00011, enter 0's at positions 5, 4, 3; enter 1's at positions 2, 1. (This makes the talk address "C" and the listen address "#".) Strictly speaking, the address includes more; S2 determines only the device-dependent bits of the address. You cannot choose talk and listen addresses separately, only as a pair. The list of possible pairs is shown in Table 2-4.

In the above example, the remote message codes MLA and MTA are X0100011 and X1000011, respectively. Thus the listen address and the talk address are distinguished, although they contain the same set of device-dependent bits, which you set into S2.

Data Output. Data (results of measurements) are provided on the DI01 . . . DI07 lines as serial strings of

Table 2-2

IEEE-488 INTERFACE KEY

Pin No.	Signal Name	Function or Significance
6	DAV	Low state: "data is available" and valid on the DI01 . . . DI08 lines.
7	NRFD	Low state: at least one listener on the bus is "not ready for data."
8	NDAC	Low state: at least one listener on the bus is "not done accepting data."
11	ATN	"Attention," specifies 1 of 2 uses for the DI01 . . . DI08 lines, as follows. Low state: controller command messages. High state: data bytes from the talker device.
9	IFC	"Interface clear." Low state: returns portions of interface system to a known quiescent state.
10	SRQ	"Service request." Low state: a talker or listener signals (to the controller) need for attention in the midst of the current sequence of events.
17	REN	"Remote enable." Low state: enables each device to enter remote mode when addressed to listen. (Remote-control commands are conveyed while ATN is high.) High state: all devices revert to local control.
5	EOI	"End or Identify." "END" if ATN is in high state, then, low state of EOI indicates end of a multiple-byte data transfer sequence.* "IDY" if ATN is in low state; then, low state of EOI activates a parallel poll.**
1	DI01	The 8-line data bus, which conveys interface messages (ATN low state) or device-dependent messages (ATN high state), such as remote-control commands from the controller or from a talker device.
2	DI02	
3	DI03	
4	DI04	
13	DI05	
14	DI06	
15	DI07	
16	DI08	

*"END" is typically sent concurrently with the delimiter "linefeed" character that terminates the string(s) of data output from the Digibridge (1, 2, or 3 lines; see para 2.8.4).
**IDY is not implemented in this Digibridge.

characters. Each character is a byte, coded according to the 7-bit ASCII code, as explained above. The alphanumeric characters used are appropriate to the data, for convenience in reading printouts. The character strings are always provided in the same sequence as that shown in Table 2-3; for example: LC value, QDRG value, bin number — if all 3 were selected by the X7 command. The carriage-return and line-feed characters at the end of each string provide a printer (for example) with the basic commands to print each string on a separate line.

For example, if the measurement was 32.500 pf, the character string for LC value is:

(space) (space) C (space) pF (3 spaces) 32.500 (CR) (LF).

If a dissipation-factor measurement was 0.2345, the character string for QDRG value is:

(space) (space) D (6 spaces) 0.2345 (CR) (LF).

If the measurement falls into bin 9, the character string for bin number is:

F (space) BIN (space) (space) 9 (CR) (LF).

The character string for LC value has a length of 17 characters; for QDRG value, 17 characters; for bin number, 10 characters — including spaces, carriage-return, and line-feed characters. Refer to Tables 2-5, 2-6, and 2-7 for details.

Status. The Digibridge responds with a status byte when the bus is in the serial poll mode and the Digibridge is addressed to talk. The status is encoded as shown in Table 2-8 and sent on the data lines DI01 . . . DI08.

2.8.5 Programming Guidelines.

If the Digibridge is to be programmed (TALK switch set to TALK/LISTEN), keep the following suggestions in mind.

2-6 INSTALLATION

1. An "unlisten" command is required before measurement is possible.
2. If not addressed to talk, the Digibridge sends a service request (SRQ low) when it has data ready to send.
3. Then SRQ will not go false (high) until the Digibridge has been addressed to talk or has been serially polled.

A typical program might include these features:

- Initial setup: with ATN true, "untalk, unlisten, my listen address (of Digibridge), my talk address (of CPU)"; then with ATN false, measurement conditions (Table 2-3).
- Measurement-enabling sequence, for example: untalk the Digibridge, send a GET, unlisten the Digibridge.
- After CPU receives the SRQ, necessary enabling of data transfer: with ATN true, "untalk, unlisten, my listen address (of CPU), my talk address (of Digibridge)"; then ATN false.

Table 2-3

INSTRUMENT PROGRAM COMMANDS

Category	Selection	Command
Parameter	Inductance (Ls/Q)	M0
	Series C, D (Cs/D)	M1
	Series C, R (Cs/Rs)	M2
	Parallel C, G (Cp/Gp)	M3
Function	Calibration	F0
	Measure	F1
	Enter*	F2
Calibration	None	C0
	Open	C1
	Short	C2
	Standard	C3
Display	Bin	D0
	Delta LC %	D1
	Value	D2
Measurement rate	Fast	S0
	Slow	S1
Measurement mode	Single	L0
	Average	L1
	Continuous	L2
Delta LC reference	Store this measurement	N0
Data output**	None	X0
	Bin number	X1
	QDRG	X2
	QDRG, bin number	X3
	LC	X4
	LC, bin number	X5
	LC, QDRG	X6
	LC, QDRG, bin number	X7
Initiation***	Start	G0
START switch	Enable	E0
	Disable	E1

*Enables entry of limits, which must be entered manually (para 3.6).
**Must be specified before initiation of measurement.
***An alternative "start" command is GET (group execute trigger), which is binary 0 001 000 in conjunction with ATN in the low state.

2.9 ENVIRONMENT.

The Digibridge can be operated in nearly any environment that is comfortable for the operator. Keep the instrument and all connections to the parts under test away from electromagnetic fields that may interfere with measurements.

Refer to the Specifications at the front of this manual for temperature and humidity tolerance and for the ranges of temperature over which open/short calibration and full recalibration are valid, for best accuracy of measurement. To safeguard the instrument during storage or shipment, use protective packaging. Refer to Section 5.

Table 2-4

ADDRESS PAIRS AND SETTINGS FOR SWITCH S2

Talk Address		Listen Address		Switch Setting *
Symbol	Binary	Symbol	Binary	5 4 3 2 1
@	1 000 000	(space)	0 100 000	0 0 0 0 0
A	1 000 001	!	0 100 001	0 0 0 0 1
B	1 000 010	"	0 100 010	0 0 0 1 0
C	1 000 011	#	0 100 011	0 0 0 1 1
D	1 000 100	$	0 100 100	0 0 1 0 0
E	1 000 101	%	0 100 101	0 0 1 0 1
F	1 000 110	&	0 100 110	0 0 1 1 0
G	1 000 111	'	0 100 111	0 0 1 1 1
H	1 001 000	(	0 101 000	0 1 0 0 0
I	1 001 001	)	0 101 001	0 1 0 0 1
J	1 001 010	*	0 101 010	0 1 0 1 0
K	1 001 011	+	0 101 011	0 1 0 1 1
L	1 001 100	,	0 101 100	0 1 1 0 0
M	1 001 101	-	0 101 101	0 1 1 0 1
N	1 001 110	.	0 101 110	0 1 1 1 0
O	1 001 111	/	0 101 111	0 1 1 1 1
P	1 010 000	0	0 110 000	1 0 0 0 0
Q	1 010 001	1	0 110 001	1 0 0 0 1
R	1 010 010	2	0 110 010	1 0 0 1 0
S	1 010 011	3	0 110 011	1 0 0 1 1
T	1 010 100	4	0 110 100	1 0 1 0 0
U	1 010 101	5	0 110 101	1 0 1 0 1
V	1 010 110	6	0 110 110	1 0 1 1 0
W	1 010 111	7	0 110 111	1 0 1 1 1
X	1 011 000	8	0 111 000	1 1 0 0 0
Y	1 011 001	9	0 111 001	1 1 0 0 1
Z	1 011 010	:	0 111 010	1 1 0 1 0
[	1 011 011	;	0 111 011	1 1 0 1 1
\	1 011 100	<	0 111 100	1 1 1 0 0
]	1 011 101	=	0 111 101	1 1 1 0 1
^	1 011 110	>	0 111 110	1 1 1 1 0

*Do NOT set the switch to 11111, because a listen address of "?" would be confused with an "attention" command. (ASCII code for "underline" is 1 011 111, and for "?" is 0 111 111.)

Table 2-5

LC-VALUE DATA OUTPUT FORMAT

Character Sequence	Purpose	Allowed Characters	Meaning
1	Status	(space) O	Normal operation Overrange
2	Format	(space)	——
3	Parameter	L C	Inductance Capacitance
4	Format	(space)	——
5, 6	Units	uH pF (space)%	Microhenries Picofarads Δ%
7, 8	Format	(space)	——
9	Sign	(space) ——	Positive LC measurement Negative LC measurement
10 . . . 15	Number	012345 6789. (space)	Measured number, right justified in format field; like the LC display.
16 17	—— Delimiter	(CR) (LF)	The standard "carriage-return" and "line-feed" characters; end of string.

Table 2-6

QDRG-VALUE DATA OUTPUT FORMAT

Character Sequence	Purpose	Allowed Characters	Meaning
1	Status	(space) O	Normal operation Overrange
2	Format	(space)	——
3	Parameter	R G D Q	Series resistance Parallel conductance Dissipation factor Quality factor
4	Format	(space)	——
5, 6	Units	(space) O kO uS mS (2 spaces)	Ohms Kilohms Microsiemens Millisiemens Dimensionless
7 . . . 9	Format	(space)	——
10 . . . 15	Number	012345 6789. (space)	Measured number, right justified in format field; like the QDRG display.
16 17	—— Delimiter	(CR) (LF)	The standard "carriage-return" and "line-feed" characters; end of string.

2-8 INSTALLATION

Table 2-7

BIN-NUMBER DATA OUTPUT FORMAT

Character Sequence	Purpose	Allowed Characters	Meaning
1	Pass/fail	(space) F	GO (bins 1 . . . 8) NO-GO (bin 0 or 9)
2	Format	(space)	——
3 4 5	Label	B I N	The word "BIN."
6, 7	Format	(space)	——
8	Category	01234 56789	Bin number assignment.
9 10	—— Delimiter	(CR) (LF)	The standard "carriage-return" and line-feed" characters; end of string.

Table 2-8

STATUS CODE

Line	Significance of a "1"	Significance of a "0"
DI08	Remote	Local.
DI07	Request for service, RQS. (This device asserted SRQ.)	No request by this Digibridge for service.
DI06	Recalibration is required.	Normal operation.
DI05	Busy, measurement in process.	Measurement completed.
DI04	Limits were tested.	Limits were not tested.
DI03	LC measured value is available.	LC value is not available.
DI02	QDRG measured value is available.	QDRG value is not available.
DI01	Bin-no. assignment is available.	Bin-no. assignment is not available.

OPERATION REFERENCE INFORMATION
GenRad 1687 Digibridge®

1. GENERAL INFORMATION.

Refer to instruction manual for details of specification, installation, operation and service.

MEASUREMENT RANGES

Parameter	Minimum (Reduced Acc)	Center of Range (Best Accuracy)	Maximum (Reduced Acc)
R (with C_s)	ØØ.01 Ω	1 k Ω	999.9 k Ω
G (with C_p)	ØØ.01 μS	1 mS	999.9 mS
L_s	ØØ.001 μH	160 μH	99999 μH
Q (with L)	ØØ.01	— — —	999.9
C_s or C_p	ØØ.001 pF	160 pF	99999 pF
D (with C_s)	.0001	— — —	9,999

2. AUTOMATIC INTERNAL SELF CHECK.

At power-on, the Digibridge thoroughly checks itself and normally goes into MEASURE function, CONT mode, C_s/D parameter, with corresponding displays. Check failure is indicated by LC display of 11111, 22222, 33333, or 44444; or function display of CAL. Failure also inhibits MEASURE function. (For 33333 failure, check that probe connects properly to its tip or test fixture; for CAL failure, complete recalibration is required.) Refer to manual, para 3.4.

3. CALIBRATION.

To correct for stray impedances in test fixture:

a. Select CAL with [FUNCTION] key.

b. Select OPEN with [CAL] key.

c. Open-circuit the DUT port of fixture or probe. For some fixtures this requires use of an open-circuit termination such as GR 900-WO; for others, simply the absence of DUT. Keep hands and stray objects 10 cm away.

d. Press START. After about 5 s, SHORT will light.

e. Short-circuit the DUT port. For some fixtures this requires the use of a known termination such as the GR 900-WN; for others, a short length of bus wire.

f. Press START. After about 5 s, STAND will light. A display of 55555 is normal. (Scale calibration with a standard capacitor can now be initiated using a special keying sequence; see instruction manual.) Normally, the previous scale calibration remains valid. To terminate this (shorter) procedure, press [FUNCTION]; see below.

4. OPERATION

a. Select MEASURE with the [FUNCTION] key.

b. Select measurement conditions with keys at right. Repeat keying advances selection as indicated nearby.

c. Select parameter with L_s/Q, C_s/D, C_s/R, or C_p/G_p key; note confirmation by light behind appropriate unit symbol on display panel. (Repeat keying has no effect except in entry mode; see para 6.)

d. Refer to manual for details of test fixture connections. Keep EXT BIAS switch OFF except when using bias.

e. Use START button for AVERAGE or SINGLE measure mode.

f. Read LC and QDRG displays.

g. If limits have been entered and enabled (para 6), observe GO/NO-GO lights.

h. If limits have been entered and enabled (para 6), to see display of bin number instead of measured values, use [DISPLAY] key to select BIN No. and remeasure the DUT.

i. To display percent difference (delta) of measured value from previously stored reference, select ΔC/ΔL with [DISPLAY] key.

j. To store the current LC measurement as reference for future use (step i): while the function is MEASURE, press the [NOM VALUE] key.

5. INTERFACE OPTION, USE OF IEEE-488 BUS.

Set the TALK switch (rear panel) as follows:

TALK ONLY—whenever bus is not in use and while communicating only with "listen-only" devices.

TALK/LISTEN—to enable use in a system with a controller device, e.g., calculator. Refer to table below for device-dependent messages to control Digibridge.

PROGRAMMING COMMANDS

Command	Code	Command	Code	Command	Code
Parameter		Display		Data output**	
L_s/Q	MØ	Bin	DØ	None	XØ
C_s/D	M1	Delta LC%	D1	Bin number	X1
C_s/R_s	M2	Value	D2	QDRG	X2
C_p/G_p	M3	Measurement Rate		QDRG, bin no.	X3
Function		Fast	SØ	LC	X4
Calibration	FØ	Slow	S1	LC, bin no.	X5
Measure	F1			LC, QDRG	X6
Enter*	F2	Measure mode		LC, QDRG, bin	X7
Calbration		Single	LØ	Initiation	
None	CØ	Average	L1	Start***	GØ
Open	C1	Continuous	L2	Manual start	
Short	C2	LC Reference		Enable switch	EØ
Standard	C3	Store	NØ	Disable sw	E1

*Enables entry of bin limits, which must be entered via keyboard.
**Must be specified before initiation of measurement.
***An alternative command is given in manual.

6. ENTRY MODE.

Entry-mode keys are the left rear block of 16. Except for [NOM VALUE], they are effective only when the selected function is ENTER LIMITS.

LIMIT ENTRY PROCEDURE	DISPLAY
With [FUNCTION] select ENTER.	ENTER LIMITS
Use parameter keys to select parameter; select R or G units by repeat keying.	μH/Q, pF/D, pF/Ω, pF/kΩ, pF/μS, pF/mS.
(X)[=][BIN No.][0] (X is the desired QDRG limit)*	(X) in QDRG display area; max 4 digits & dec pt.
(Y)[=][NOM VALUE] (Y = number; displayed units)*	(Y) in LC display area; max 5 digits & dec pt.
(S)[%][=][BIN No.](Z) (for symmetrical limit pair) (S is number up to 100.00)* (Z is 1, 2, 3, . . . 8).	Upper limit in LC area, lower limit in QDRG area, (values, not percents).
(H)[%][−](L)[%][=][BIN No.](Z) (for unsymmetrical limit pair) (H is number up to 10000)* (L is number up to 100.00)*	Upper limit in LC area, lower limit in QDRG area, (values, not percents).
To change nom value, reenter.**	(Y) in LC display area.
To change bin limits, reenter.	Both limit values.
To close a bin, use zero for S.	Identical limit values.
To see, press [NOM VALUE]	(Y) in LC display area.
To see, key in [BIN No.](Z)	Limit values (as above).
To inhibit, [0][=][NOM VALUE]	0 in LC display area.
To enable, (Y)[=][NOM VALUE]	(Y) in LC display area.

*Use numerical and decimal-pt keys in sequence; max of 5 digits & dec pt valid even if display limited to 4.
**New nominal value does not affect bins already set up.

BIN No.	GENERAL ASSIGNMENT
Bin 0	QDRG failure
Bin 1	LC pass, tightest tolerance
Bin 2	LC pass, next looser tolerance
. . . . .	(progressively looser tolerances)
Bin 8	LC pass, last available bin
Bin 9	LC fail (default bin)

To resume operation using limits entered as above, press [FUNCTION] key. (See para 4.)

Operation – Section 3

3.1 BASIC PROCEDURE 3-1
3.2 CONNECTION OF DUT 3-2
3.3 ACCURACY AND MEASUREMENT RATE 3-6
3.4 CALIBRATION 3-8
3.5 PARAMETER AND MODE 3-11
3.6 LIMITS, BINS, GO/NO-GO, AND PERCENT DELTAS 3-13
3.7 BIAS 3-15
3.8 OPERATION WITH HANDLER 3-16
3.9 SYSTEM CONSIDERATIONS 3-16

3.1 BASIC PROCEDURE.

For initial familiarization, follow this procedure carefully. After that, use this as a ready reference and refer to later paragraphs in Operation for details.

Refer also to the Operation Reference Information, found stored in a pocket under the instrument. Reach under the front edge and pull the card forward as far as it slides easily. After use, slide it back in the pocket, for protection.

CAUTION

Set the line voltage switch properly (rear panel) before connecting the power cord.

a. Before connecting the power cord, slide the line-voltage switch (rear panel) to the position that corresponds to your power-line voltage. Power must be nominally 50 or 60 Hz ac, in either range: 90 to 125 V or 180 to 250 V.

Temperature. If the Digibridge has been very cold, warm it up in a dry environment, allowing time for the interior to reach 0°C or above, before applying power. Otherwise, the Digibridge may require a complete recalibration before it can be used.

Power Cord. Connect the power cord to the rear-panel connector, and then to your power line.

Power. Depress the POWER button so that is stays in the depressed position. (To turn the instrument off, push and release this button so that it remains in the released position.)

NOTE

Clean the leads of the DUT if they are noticeably dirty, even though the probe or test-fixture contacts will usually bite through a film of wax to provide adequate connections.

b. Connect a typical device, whose impedance is to be measured, as follows. (This device under test is denoted DUT.)

Probe. Press the probe nose against the 2 main terminals of the DUT, making good contacts with the probe tips. If appropriate, change one or both of the probe tips to another hole(s) in the probe nose. To do so, pull the tip out with your fingers and push it into the preferred hole. Be sure one tip is on each side of the center of the nose. (Each tip has 3 possible positions.)

Spacing of probe tips can be set from 3 to 16 mm apart (1/8 to 5/8 in.) between centers.

Test Fixture. Connect the DUT to the text fixture as described in para 3.2.

NOTE

For best accuracy of measurement, perform an open/short calibration (a simple procedure; see para 3.4) after each change of probe tip spacing or test fixture configuration, and at least once a day.

c. Choose the conditions of measurement. For the first 4 selections, below, the recommended choice is automatically provided when you switch the POWER ON. (To obtain another choice, press the corresponding key in the keyboard as many times as necessary, watching the indicator lights.)

Function: MEASURE
Display: VALUE
Measurement Rate: SLOW
Measurement Mode: CONTINUOUS
External Bias Switch: OFF
Talk Switch: TALK ONLY (rear panel).*

*This switch is provided only if you have the Interface Option.

Parameter. For inductance, press Ls/Q; for capacitance, press Cs/D, Cs/Rs, or Cp/Gp; for resistance, press Cs/Rs; etc. The choice is confirmed by illumination of the appropriate unit label at bottom of display panel.

d. Read the measurement on the main displays. The LC display is the principal measurement, complete with decimal point and units which are indicated by the light spot in the lower part of the display panel. The QDRG display is shown similarly; the light spot indicates Q, D, or units for Rs or Gp, according to your parameter selection and the measurement.

NOTE

The following actions or conditions will abort measurements in progress or prevent measurement.

1. Pressing any key listed in step c above will abort the current measurement.
2. If there is no proper IEEE-488 system connection and the TALK switch on the rear panel is switched to TALK/LISTEN, continuous measurement is inhibited. (If you have the Interface Option, generally keep this switch set to TALK ONLY.)
3. Failure in the power-up self check will cause a display of 11111, 22222, 33333, or 44444; or the FUNCTION to be CAL. Refer to para 3.4.6.

3.2 CONNECTION OF THE DUT.

NOTE

Be sure POWER is switched OFF while you disconnect and/or connect probe, probe nose, or test fixture. Otherwise you lose benefits provided in the power-up self check.

3.2.1 Standard Probe 1687-9603.

The standard probe (supplied) with its nose provides for convenient connection to many kinds of component parts and circuits having fairly solid terminals spaced about 2 to 17 mm apart. True 4-terminal connections are made within the nose of the probe. Source voltage is 0.1 V.

To change the spacing between tips, pull one or both out of the probe nose and push it into either of the other 2 holes on the same side of the probe's centerline. (Each tip has 3 locations.) Probe tips can be set at the following spacings: 3.2, 6.4, 9.5, 12.7, and 15.9 mm (1 to 5 eighths of an inch) between centers.

To connect the DUT, press the spring-loaded tips against the 2 main terminals of the DUT.

NOTE

After changing probe tip location, perform an open/short calibration. (See para 3.4.)

3.2.2 Large-Signal Probe 1687-9604.

The optional probe 1687-9604 makes measurements at a relatively high level (1-V source), at some sacrifice in accuracy. The instructions for its use are the same as for the standard probe, including use of the test fixture.

To exchange probes, use a narrow-bladed screwdriver to loosen the 2 captive screws left and right of the connector at the front edge of the Digibridge and pull the connector directly forward. Then push the corresponding connector of the other probe into the same place and tighten the 2 captive screws.

NOTE

After installing a different probe, perform a full recalibration of the Digibridge.

Full recalibration requires the use of test fixture, adaptor, standards, etc., as described in para 3.4.

3.2.3 Use of Probe Nose.

To assure specified accuracy of measurements made with the probe-nose connection to a DUT, observe the operational details summarized below. See also para 3.4.

Be sure to repeat the open/short calibration after repositioning probe tips.

For the open-circuit portion of open/short calibration, depress the probe tips fully, against a suitable block of dielectric material. This is particularly important for measurement of small capacitance.

For the short-circuit portion of open/short calibration, depress the probe tips fully, against a suitable large-area conductor. This is particularly important for measurement of large capacitance.

Be aware of the effect of the probe nose on fringing fields. This is important for measurement of small-C capacitors with bulky terminals (hence relatively large fringing capacitance). Since the probe tips and nose must be in the fringing field during measurement, their presence increases the energy in that field. The consequent increase in the fringing capacitance is as much as 0.1 pF, for bulky, closely-spaced terminals; far less for small, well separated terminals. If this phenomenon is important in a particular measurement, position the probe nose where it encroaches as little as practicable into the dense part of the fringing field (the vicinity where opposite terminals are closest together, particularly if bulky).

However, if the DUT has terminals that match the test fixture, with or without adaptors, then measurement with the fixture is usually preferred to measurement with the probe nose.

3.2.4 Test Fixture 1687-9600. Figures 3-1, 3-2, 3-3.

The test fixture and its axial-lead adaptor (P/N 1687-4100, included) together provide convenient, reliable,

Figure 3-1. Test fixture and accessories. 1 — Test fixture; see Table 1-3. 2 — Pair of slots for radial-lead DUT, labeled with polarity of bias, if any. 3 — Axial-lead adaptor. 4 — Probe and cable assembly, shown in position for plugging into test fixture. 5 — Probe nose, shown unplugged from probe. 6 — Thumb screw used to tighten clamp that holds probe securely in position. 7 — Connector that fits J8 on the front of the Digibridge.

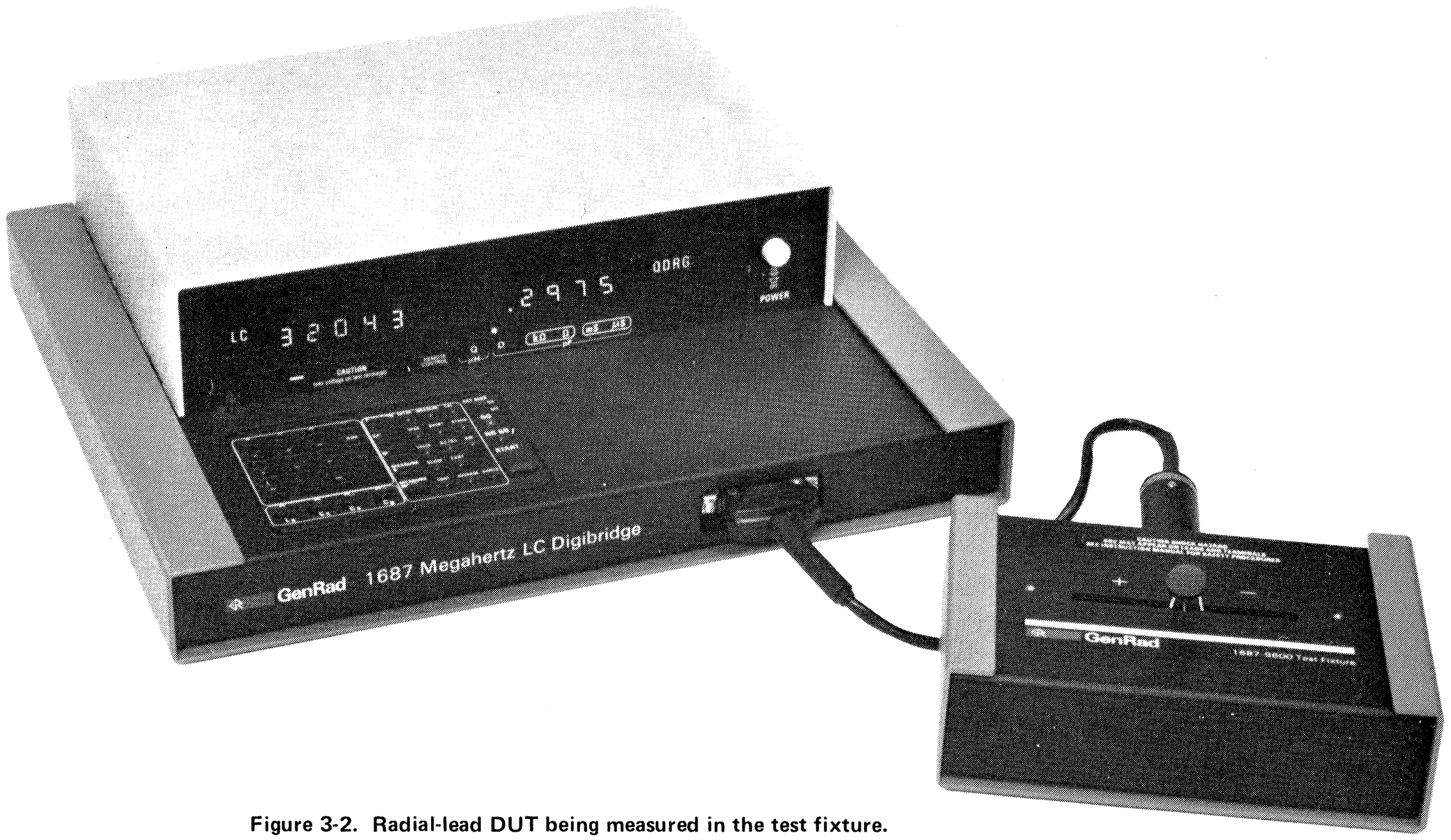

Figure 3-2. Radial-lead DUT being measured in the test fixture.

Figure 3-3. Axial-lead DUT being measured in the test fixture, with adaptor.

4-terminal connection to any common radial-lead or axial-lead component part. Install the test fixture as follows.

a. Loosen the thumb screw in the clamp beside the large round hole in the back panel of the fixture.

b. Remove nose cone from the probe as follows. Using a 6-splined wrench, size 1.88 mm (0.074 in.), turn the setscrew near the nose end of the probe *inward,* free from the probe nose housing. A suitable wrench is supplied with the instrument. Pull the probe nose off in the axial direction. (Reassembly note: seat the setscrew by turning ccw; tighten gently.)

c. Insert probe carefully through the round hole in the fixture so the connector mates properly inside.

d. Finger tighten the thumb screw firmly, to lock the probe body in position.

The slots in the test fixture accommodate a pair of parallel wires of any diameter from 0.25 mm (0.01 in., AWG 30) to 1 mm (0.04 in., AWG 18), spaced from 6 to 81 mm apart (0.23 to 3.2 in.) or equivalent strip conductors. Each "radial" wire must be at least 0.8 cm long (0.3 in.). The divider between the test slots contains a shield, at guard (ground) potential, with its edge exposed. The axial-lead adaptor accommodates wires of any diameter up to 1.5 mm (0.06 in., AWG 15). The body of the DUT that will fit between these adaptors can be 62 mm long and 41 mm diameter (2.4 x 1.6 in.) maximum. Each "axial" wire must be at least 3 mm long (0.12 in.).

For radial-lead parts. Remove the adaptor from the test fixture by loosening the 2 knurled captive screws and pulling the adaptor directly upward. Insert the DUT leads into the test-fixture slots.

For axial-lead parts. Insert the adaptor in the test fixture as follows.

a. Orient the adaptor with the screws (which are slightly off center) toward the rear of the test fixture.

b. Press the adaptor downward so that the contact blades enter the slots of the test fixture and the captive thumb screws enter their holes.

c. Finger tighten the thumb screws.

d. Slide the contact assemblies together or apart to accommodate the DUT to be measured. (Place them as close together as practicable if the DUT has short or fragile leads.)

General. Insert the DUT so one lead makes connection to each slot of the test fixture or adaptor. Insertion and removal are smooth, easy operations and connections are reliable if leads are reasonably clean and straight.

Be sure to remove any obvious dirt from leads before inserting them. The test-fixture contacts will wipe through a film of wax, but will become clogged and ineffectual if you are careless about cleanliness. Be sure the contact pair

3-4 OPERATION

inside each half of the test fixture or adaptor is held open by a single item ONLY. (Otherwise, you will not obtain true "Kelvin" connections to the DUT.)

3.2.5 Reference Standard Adaptor 1687-4600.

For connection of standards (necessary for full recalibration) or any ungrounded DUT having the GR900® precision coaxial connector, attach the reference standard adaptor to the test fixture as follows. Notice that the outer conductor of this connector is not at ground potential and must not be grounded by the DUT. This adaptor is supplied in the 1687-9605 Calibration Kit.

a. Orient the adaptor so that the outer-conductor pin enters the "—" slot of the fixture. (This is consistent with the fact that the mounting screws are offset slightly from the centerline of the slots.)

b. Press the adaptor directly downward and finger tighten the thumb screws.

3.2.6 User's Cables. Figure 3-4.

For connection of DUTs in test chambers, dielectric test cells, component handlers, or any arbitrary test fixture, make a cable as follows.

a. Obtain coaxial cable and connectors as listed:

1. GR 1687-8181 connector to mate with Digibridge probe. (Notice: this is a 2-cm, 0.8-in., section containing 5 pairs of contacts, cut from a board-edge connector, Amphenol P/N 225-22521-401-117. Use the Amphenol part if it is available.)
2. Coaxial cable RG-174B/U, or equivalent. (Notice: higher-capacitance cable is not suitable for the length specified.)
3. Connector(s) if required to fit your test fixture. For example, the banana plug and coaxial connector shown in the diagram are GR 274-P (P/N 0274-9716) and GR 874-C58A (P/N 0874-9414), respectively.

b. Using 4 lengths of coaxial cable, each 30 cm long or shorter, connect from the board-edge connector to the test fixture or its connector as shown in the accompanying figure. Notice that the board-edge connector is shown as viewed from the wiring (back) side, positioned in the open end of the probe (probe nose removed). Mark the 1687-8181 connector clearly so that it will always be plugged in properly. (Do not interchange "high" and "low" connections, thus reversing the bias polarity).

c. In general, make 5-terminal connections at the test end so that both "low" wires connect to one point and both "high" wires to another, as close as possible to the DUT. The coaxial-cable shields, which are at ground potential, should connect the shield or case (if any) of fixture or DUT. The alternative test-end connections shown in the figure are recommended for making measurements on samples in a test cell such as the Model LD-3, made by Balsbaugh Laboratories, South Hingham, Massachusetts.

Notice that there must be a rather low-resistance connection (10 Ω recommended) between the two "high" wires and another between the two "low" wires. Otherwise, there will be a failure in one of the power-up self checks; see para 3.4. The presence of these 10-Ω resistors at the far end of the cable does not invalidate the Kelvin connection. They should be physically small and electrically shielded from each other and the environment.

Connection to a wide variety of test fixtures and DUT configurations is possible by varying these instructions. Keep the cables short, the 4 critical wires shielded, and the geometry fixed. Conditions for open/short calibration must be reproducible and well defined for future reference.

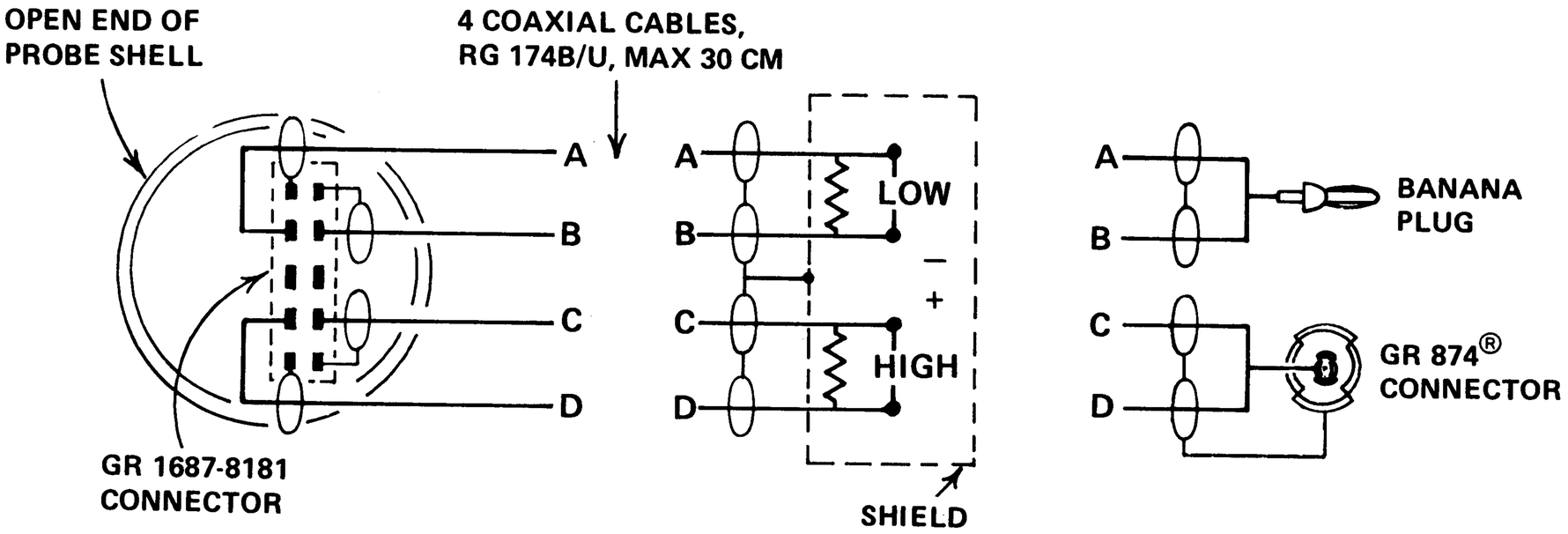

Figure 3-4. Diagram of user's cable connection to any general DUT or test fixture. A recommended 3-wire connection is also shown, suited for use with certain test cells. In general, the 5 wires should not be left open circuited; connect from A to B through 10 ohms or less resistance and connect from C to D similarly.

3.3 ACCURACY AND SPEED.

3.3.1 General.

The basic accuracy of this Digibridge, with the probe supplied (with or without the recommended test fixture) is as follows: ±0.1% for C, ±0.2% for L, ±0.14% for R or G, ±0.004 for D, and ±0.012 for Q. These specifications apply only for certain ranges of values, for suitable measurement conditions. Outside of these ranges and conditions, accuracy drops off in known ways, which should be understood by the operator. For example, selection of FAST measurement rate leads to less accurate measurements. To facilitate choice of conditions (if optional) and determination of accuracy for any particular results, refer to the accuracy statement in the specifications at the front of this manual, as well as the discussion of correcting for the inductance of the short circuit used in open/short calibration (para 3.4). Fringing effects are discussed in para 3.2.3.

Specified accuracy is presented conveniently in a set of graphs that show how accuracies of principal and secondary measured values depend on several factors.

3.3.2 LC and RG Basic Accuracy. Figure 3-5.

This graph shows the basic accuracy of the principal measured parameter L or C as a percent of measured value. Accuracy of secondary measurements R and G is shown also, being very similar. "Basic" accuracy is obtained when the cross term (i.e., quadrature component) is small.

A slightly different curve is shown for each type of parameter, L, C, or R (G). The effect of measurement rate is a factor of 5 in accuracy, as shown by a dual scale at the left.

Example: A low-D capacitor of 1000 pF is measured using the SLOW measurement rate. The graph shows that accuracy is 0.15% or better.

3.3.3 L, C, R, or G Accuracy Factor. Figure 3-6.

This accuracy factor is the cross term, which must be multiplied by the basic accuracy to obtain accuracy for measurements of "impure" reactance or resistance. Notice that (unlike most of the graphed relationships) this formula is easier to use than its graph:

Accuracy factor = 1 + D.

To use the accuracy-factor graph, first read D or Q on the Digibridge display. If the measurement of interest is R or G, temporarily select Cs/D with the appropriate parameter key, to obtain the value of D for entry into this graph.

Example: If the capacitor of the preceding example has a D of 0.5, the graph shows that the accuracy factor is 1.5. Therefore the accuracy of C measurement is 1.5 x 0.15% = 0.23%.

3.3.4 D and Q Basic Accuracy. Figures 3-7, 3-8.

These graphs show the basic accuracy of D and Q measurements, as a percent of measured value. (Notice that the specifications are written in terms of absolute error rather than percentage.) This "basic" accuracy must be multiplied by the DQ accuracy factor (right-hand scale in Figure 3-5) to obtain accuracy of measured D or Q.

Example: If D is 0.5, the graph shows D basic accuracy is 0.35% (for SLOW rate). For a C of 1000 pF, the DQ accuracy factor is about 1.5. Therefore D accuracy is: 1.5 x 0.35% = 0.53%.

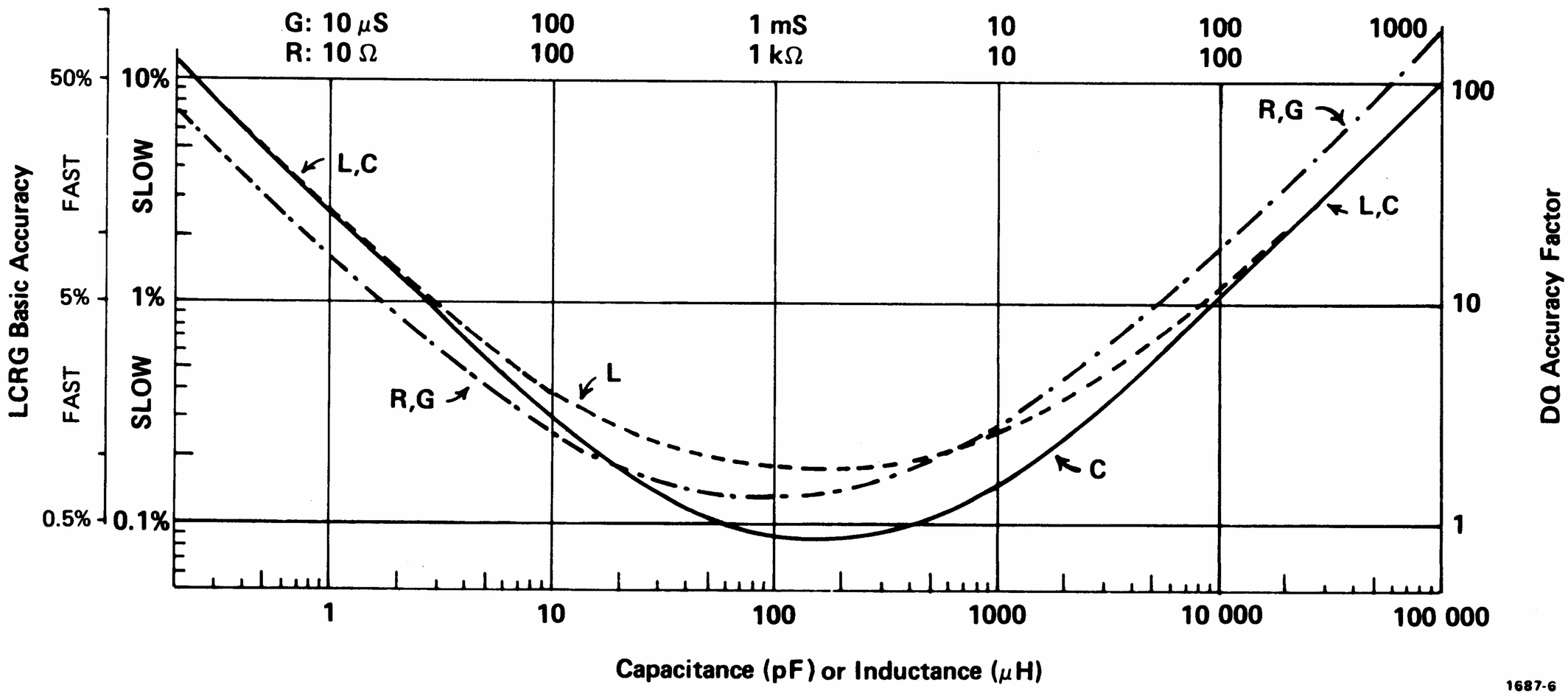

Figure 3-5. LC and RG basic accuracy as a percent of reading, for each of the measurement rates. The DQ accuracy factor (right-hand scale) is the multiplier that, applied to the basic DQ accuracy, yields complete DQ accuracy.

3-6 OPERATION

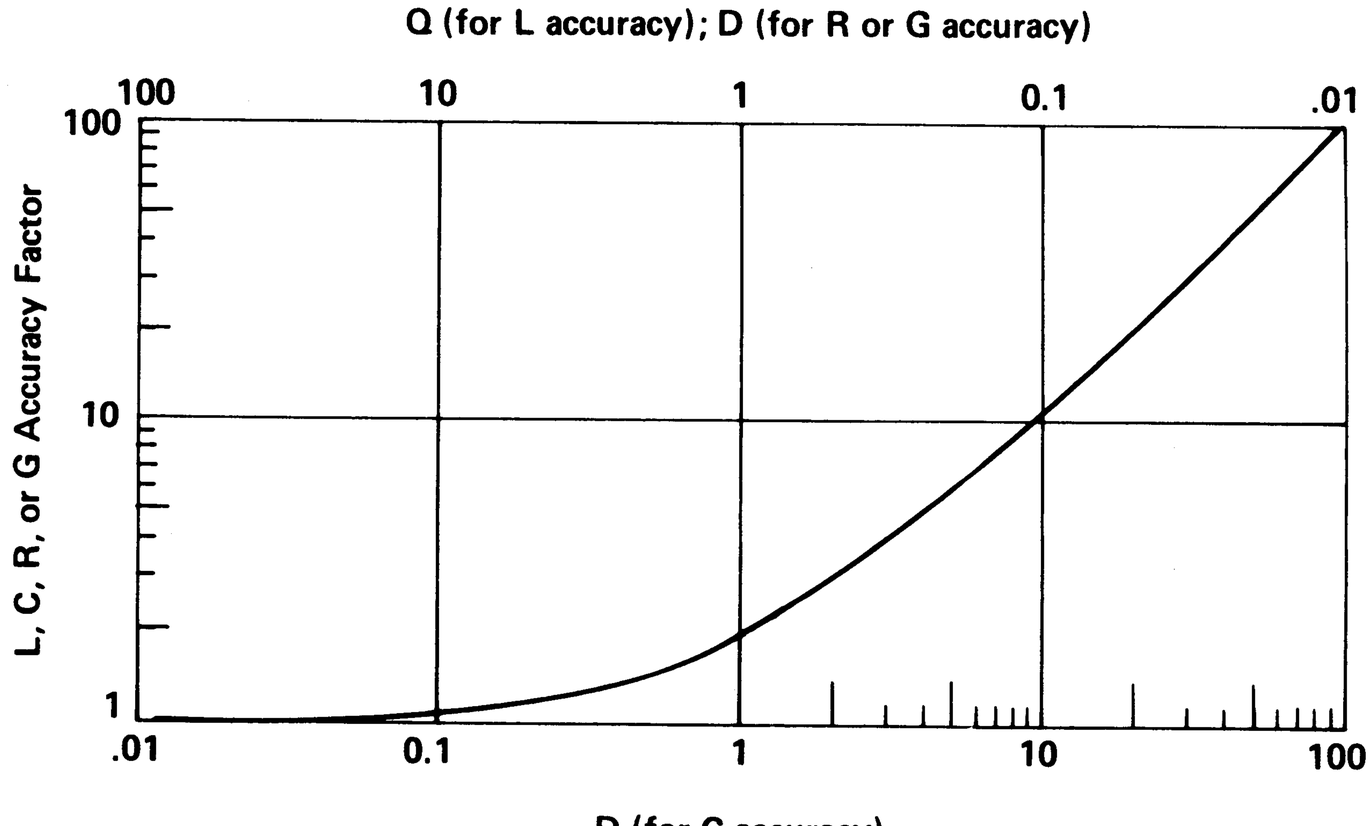

Figure 3-6. L, C, R, or G accuracy factor (or cross term) as a function of D or Q. Multiply the basic accuracy (previous figure) by this factor to obtain the complete accuracy. Notice that for nearly "pure" reactance or resistance, this factor is unity.

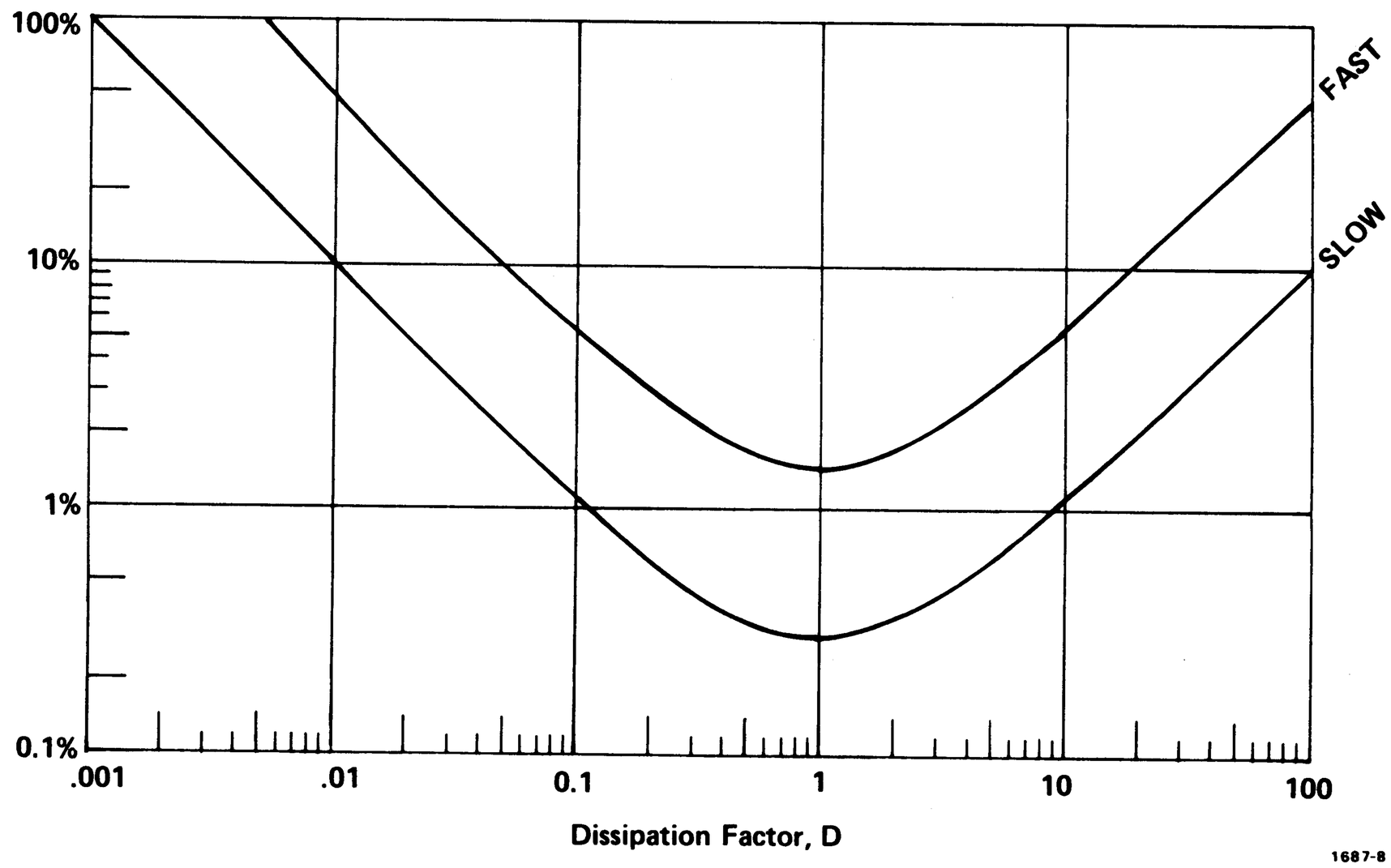

Figure 3-7. D basic accuracy as a percent of reading (for capacitors). Each curve applies to one measurement rate, as labeled. For measurements of large or small capacitances, the D accuracy is somewhat worse than for medium capacitance; the complete D accuracy is the basic accuracy (this graph) multipled by the DQ accuracy factor (Figure 3-5, right-hand scale).

3.3.5 Convenience of Logarithmic Scales.

The logarithmic scales on these figures make it easy to apply the accuracy factors visually, as distances along scales. In the preceding example, instead of reading a value of DQ accuracy factor, mark on a scrap of paper the height of the C curve (at 1000 pF) above the base line (1) of the DQ accuracy factor scale. On the D basic accuracy graph, point to the basic accuracy on the vertical scale (0.35%); hold the scrap of paper adjacent to the scale and move the pointer up by the increment of height as marked; the point reached on this scale is the D accuracy (0.53%).

3.3.6 Measurement Rate.

Choose either of the two rates with the MEASURE

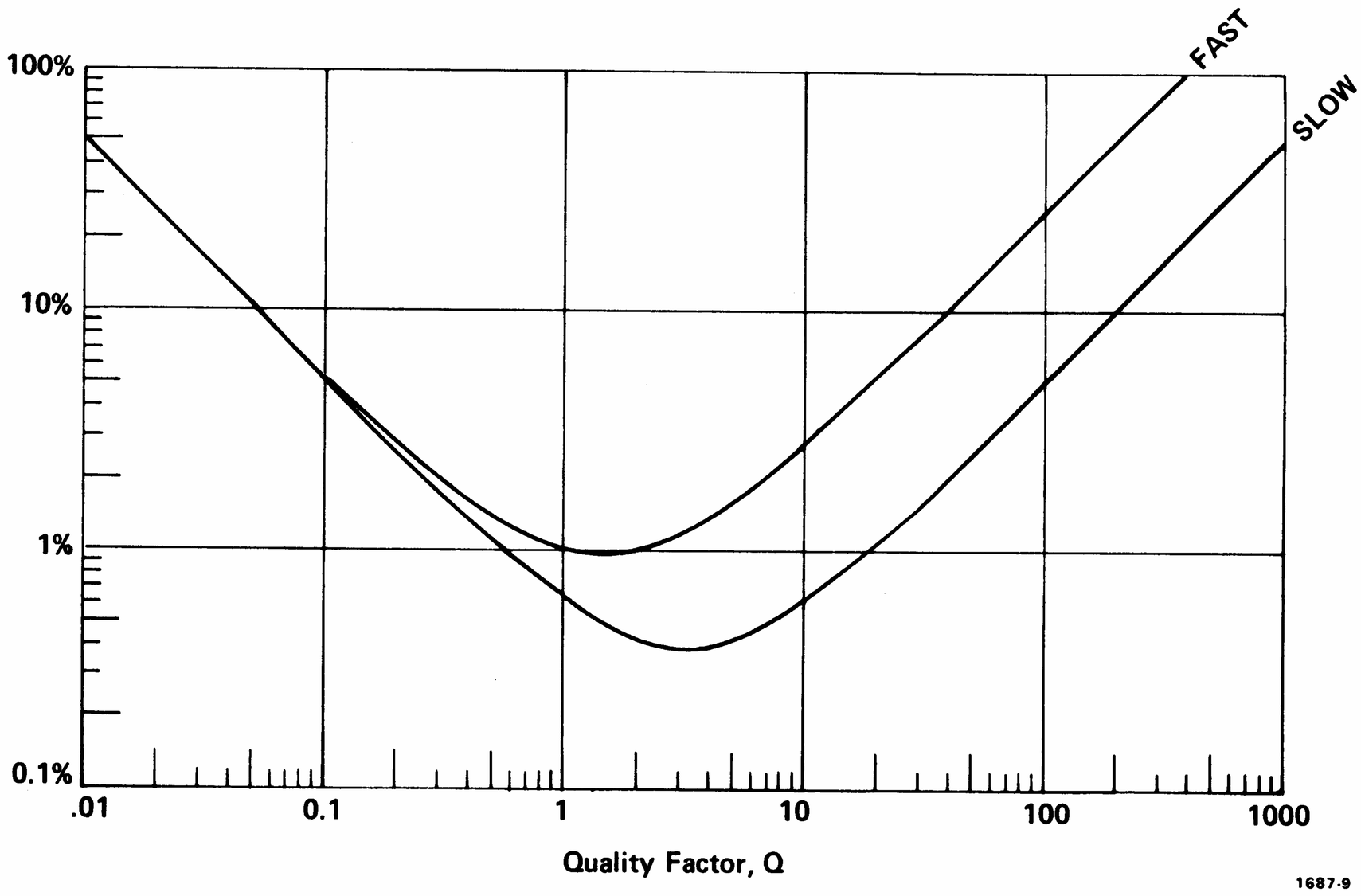

Figure 3-8. Q basic accuracy as a percent of reading (for inductors). Each curve applies to one measurement rate, as labeled. For measurement of large or small inductances, the Q accuracy is somewhat worse than for medium inductance; the complete Q accuracy is the basic accuracy (this graph) multiplied by the DQ accuracy factor (Figure 3-5, right-hand scale).

RATE key: SLOW or FAST. The continuous-mode rates are respectively about 2 and 4 measurements per second. A SINGLE measurement takes essentially the same length of time after the START signal as each continuous-mode measurement; a set of AVERAGE measurements take 10 times longer. (The time required to change units or move the decimal point is negligible.)

3.4 CALIBRATION.

3.4.1 Introduction.

There are 2 distinct levels: open/short calibration (which provides in a convenient way the necessary correction for test fixture) and full recalibration.

Open/short calibration. This accounts for changes in "stray" impedances in test fixture, probe, etc. caused by changes in temperature or geometry. It should be performed after every change of test fixture, adaptor, spacing of probe tips or axial-lead adaptor contacts, etc. It should also be performed periodically, perhaps in the middle of each work day, even though test fixture geometry is not purposely changed.

Notice that accuracy specifications are met only for ambient temperature within ±5°C of the temperature at which the last open/short calibration was made.

Full recalibration. This procedure corrects for possible long-term drift in the basic impedance-magnitude scale in the Digibridge or reestablishes scale calibration, which is retained in the form of numbers in a digital memory, in the event of loss (possibly by loss of battery voltage; see para 3.4.6). Full recalibration should be performed routinely once every 12 months and whenever large changes in ambient temperature are encountered, to assure specified accuracy of measurements.

Notice that accuracy specifications are met only for ambient temperature within ±15°C of the temperature at which the last full recalibration was made. Factory calibration is done at about 25°C.

3.4.2 Open/Short Calibration.

a. Set the geometry of the test fixture as desired for the anticipated measurements. In other words, install or remove adaptors as desired; set spacing of probe tips or movable adaptor parts appropriately. (This procedure is valid for a specific test-fixture geometry and must be repeated for each different geometry.)

NOTE

Be sure POWER is OFF while you are making any changes in connection among: instrument, probe, probe nose, and test fixture. Otherwise, you lose benefits provided in the power-up self check.

b. Switch the POWER ON. Select CAL with the [FUNCTION] key.

c. Select OPEN with the [CAL] key. Notice that the measure mode is automatically set to AVERAGE.

d. Open-circuit the DUT port of test fixture or probe. Keep hands and stray objects at least 10 cm away. Usually "open circuit" means simply the absence of a DUT. However, some measurements are defined with respect to a special open-circuit termination such as the GR 900-WO (which can be installed now if such measurements are anticipated).

If the probe is being used, with nose installed, make the correct open-circuit condition by pressing the tips against a block of low-loss, low-dielectric-constant material, using enough force to make the tips receded fully. Suggested materials are: polytetrafluoroethylene (Teflon), dry clean soft wood, polyethylene, polystyrene, polymethyl methacrylate (Lucite or Plexiglass), a thick pad of dry paper, or vinyl (listed in order of increasing dielectric constant).

e. Press the START button and keep away from the open port for five seconds or so, until the CAL indication changes from OPEN to SHORT. (Open-circuit data have now been stored.)

f. Short-circuit the DUT port of test fixture or probe, using a very low-impedance connection, for example:

1. Probe. Press contacts against thick ungrounded nonmagnetic conductor, such as copper sheet of at least 0.25 mm (.010 in.) thickness, 2.5 x 5 cm area (1 x 2 in.); or copper bar at least 1 x 1 x 3 cm (0.4 x 0.4 x 1 in.). Depress tips fully.
2. Test fixture (1687-9600) with axial-lead adaptor. Slide the contact assemblies to closest spacing; insert short length of 1-mm (AWG 18) bus wire.
3. Same test fixture without adaptor. Insert a small U-shaped piece of 1-mm (AWG 18) bus wire, initial length 3 cm (1.2 in.); be sure it does not touch edge of shield between the slots.
4. Same test fixture with adaptor to GR900® connector. Use a GR 900-WN Precision Short-Circuit Termination.

g. Confirm that the CAL indication is SHORT. Press START and wait for 5 s or so until this indication changes from SHORT to STAND. (Short-circuit data have now been stored.) The LC display of 55555 is now normal.

h. Record the ambient temperature for reference by the operator.

i. Terminate this procedure and proceed with other uses of the Digibridge by selecting MEASURE or ENTER with the [FUNCTION] key, the desired mode with [MEASURE MODE] key, etc.

3.4.3 Full Recalibration. Figure 3-9.

The necessary and optional equipment for full recalibration is listed in Table 3-1. The procedure is as follows.

a. Establish the ambient temperature as desired, normally 23° ± 3°C. For special applications, this can be anywhere in the operating temperature range (0° to 50°C). Switch POWER ON, and allow 30 minutes "warmup," for all interior circuits to reach equilibrium.

b. Determine the capacitance to be added by the particular 100-pF standard, as follows. Read the certified 1-kHz value from its certificate of calibration. Be sure to correct for temperature, if appropriate to do so. (1-MHz correction is negligible.) From this value, subtract as follows.

If the 1-pF standard is not available, subtract the effective capacitance of the open-circuit termination (0.172 pF ± 0.008 pF).

Alternatively, for even higher precision, if the 1-pF standard is available, find the certified value of the 100-pF standard and subtract the certified value of the 1-pF standard.

c. Remove the nose from the probe and connect probe to test fixture. Install the reference standard adaptor. Refer to Table 3-1 and para 3.2. (If subsequent measurements require a change of probe, make the change now, before recalibration. Keep POWER OFF during the change.)

d. With the [FUNCTION] key, select ENTER. Use normal entry procedure to enter as "nominal": the value determined in step b. For example:

[9] [9] [.] [7] [8] [3] [=] [NOM VALUE].

(The displayed number may change very slightly, reflecting use of binary math in the CPU.)

e. Perform the open/short calibration, in the usual way. That is, follow the procedure of para 3.4.2, steps b through g. In step d, use the open-circuit termination or the 1-pF standard, whichever was accounted for in step b of the present procedure. In step f of that procedure, use the short-circuit termination.

Confirm that the LC display is now 55555, indicating that "calibration interlock" is in effect.

f. Connect the 100-pF standard as DUT. The capacitance thus added has already been entered as "nominal value."

g. Initiate the scale calibration process by pressing these keys in sequence:

[=] [NOM VALUE] [START].

(No other sequence will operate the interlock.) Observe that the 55555 display disappears after the second keystroke, but that the CAL indication remains at STAND for a time after you press START. *Make no changes while STAND remains lit.* When this light goes out, scale calibration is complete.

h. Record the ambient temperature for reference.

i. If the next measurement is to be made on the reference-standard adaptor, and if the open-circuit termination was used (not the 1-pF standard) in the procedure above (steps b, e), then proceed to use the Digibridge by selecting MEASURE or ENTER with the [FUNCTION] key, the desired mode with [MEASURE MODE] key, etc.

However, if any change is needed in the test fixture, make the change and perform an open/short calibration (para 3.4.2) before measuring.

Figure 3-9. Calibration setup. The coaxial capacitance standard is shown on the reference-standard adaptor, on the test fixture.

Table 3-1
CALIBRATION EQUIPMENT

Description	Type	GR Catalog No.
Test fixture	——	1687-9600
Calibration Kit (includes the following)	——	1687-9605
Reference-standard adaptor	——	1687-9602*
Coaxial capacitance standard, 100 pF	1406-D	1406-9704*
Open-circuit termination	900-WO	0900-9981*
Short-circuit termination	900-WN	0900-0071*
Coaxial capacitance standard, 1 pF (optional)	1405-E	1405-9700

*Included in kit.

NOTE

Measurements of capacitors fitted with GR900 connectors (on the fixture as set up for full recalibration) yield the *effective* value of capacitance which is smaller than the value calibrated by Gen Rad. See below.

3.4.4 Effective Capacitance of Coaxial Precision Capacitors.

The calibrated value of a GR coaxial capacitance standard with a GR900 connector is regularly determined to include the electric fields up to the reference plane of the connector when mated to another, without any fringing fields. (Some capacitance bridges can be "zeroed" to read this calibrated value directly.) However, this Digibridge is automatically "zeroed" by the open-circuit data obtained (typically) with a GR900-WO open-circuit termination, which has a capacitance, beyond the reference plane of 0.172 pF ± 0.008 pF (most of which is "fringing capacitance"). In a sense, the *effective* reference plane is out slightly (away from the test fixture) versus the reference plane of the connector. Therefore, when a coaxial capacitance standard is measured as a DUT, the Digibridge measures it with respect to an effective reference plane slightly toward the capacitor from the reference plane of the connector.

The Digibridge capacitance measurement is the difference between the capacitance of the DUT on the test fixture and the "zero" determined by the open-circuit termination. In practical terms, add the "zero" capacitance (0.172 pF) to the Digibridge-measured (effective) value of a coaxial capacitance standard to obtain the intrinsic value comparable to its certification.

Notice that there is no easy way to eliminate this fringing effect. If the open-circuit correction (para 3.4.2) was

3-10 OPERATION

made with the reference-standard adaptor truly "open," the fringing capacitance would be only slightly smaller (about 0.155 pF) and would be less well known.

Also notice that for many measurements, the "zero" of an open-circuited test fixture is the generally accepted reference. (The value of a DUT is the change it introduces when connected to that fixture.)

3.4.5 Correction for Inductance of the Short Circuit.

For best accuracy in measurements of electrically very small inductors or very large capacitors, a correction should be made to the Digibridge reading, to account for the fact that the short circuit used in the open/short calibration does have some finite inductance.

The low-impedance short circuits recommended above (para 3.4.2) have sufficiently low inductances so that the Digibridge will meet specifications without correction, except for the U-shaped bus wire used in the test fixture without adaptor. For the purpose of this correction, assume that short circuit has inductance of .010 μH (L in the following calculations).

For small inductors with closely spaced radial leads. Add the inductance of the short circuit (L above) to the Digibridge readout of inductance.

For large capacitors with closely spaced radial leads. Use the following formula:

$$C' = C(1 - \omega^2 LC)$$

where C′ = corrected measurement; C = Digibridge capacitance readout; $\omega^2 = 40 \times 10^{12}$ = square of $2 \times \pi \times$ frequency; and L = inductance of short circuit. (See above.)

Notice that the correction for L = .010 μH is a fine point. L could be increased to .025 μH before the effect on measurement accuracy (uncorrected) would be to double the error allowed in the performance specifications, for small-L or large-C measurements. Also notice that the corrections described above are completely negligible for inductors larger than 500 μH and capacitors smaller than 100 pF.

3.4.6 Power-Up Self Check.

If the Digibridge displays one of the following indications when you switch POWER ON, there has been a failure in the automatic self check. The nature of the failure and the proper remedy for each are indicated below. Normal operation is inhibited in each of these cases.

11111 1111. The random-access-memory read/write exercise was imperfect. Try power-up again; otherwise the remedy is beyond the operator's control; repair service is required.

22222 XXXX. The detector/converter half-scale (zero) test was not completed satisfactorily. Remedy is the same as above. (The QDRG display provides some service information.)

33333 XXXX. The front-end test failed. Check carefully that a probe/cable assembly is installed and that it is properly terminated. Either the probe nose or 1687-9600 Test Fixture is a proper termination. If you have a 5-wire user's cable instead (refer to Figure 3-4), there must be a low-impedance connection, 10 Ω or less, between A and B and another between C and D. Switch POWER OFF and ON again. If these remedies are ineffective, repair service is required.

44444 4444. The dual-slope converter/detector timeout has been invoked; there has been an invalid measurement. This can occur during power-up self check or during any measurement. (An all-4s display flashing alternately with measurement results will indicate an intermittent fault.) Seek repair service.

CAL. If FUNCTION is automatically set to CAL at power-up, there has been a loss of calibration data stored in random-access memory. A possible cause is low battery voltage. (Life expectancy of battery, at least in dry climate, is 5 to 10 years.) Refer to Table 1-3 for replacement part numbers. Replacement, although easy to do, is a repair/service procedure. (Para 5.8.)

The Digibridge can be used with low battery voltage by performing a full recalibration each time POWER is turned ON. *However, such a recourse is NOT recommended for regular practice. Replace the battery as soon as possible.*

Another possible cause for loss of calibration data is attempted operation while the internal temperature is too cold (even though the environment may be warmer). Allow the internal parts to come up to specified operating temperature (0° to 50°C) in a warm DRY environment before power-up. Then recalibrate if necessary.

3.5 PARAMETER AND MODE.

3.5.1 Parameter.

General. The selection of the parameter to be measured is almost self-explanatory. Depress the appropriate button: Ls/Q, Cs/D, Cs/Rs, or Cp/Gp. The readout will indicate a completely wrong choice, as explained below. Notice that the appearance of a device can be misleading. (For example, a faulty inductor can be essentially capacitive or resistive; a component part can be mislabeled or unlabeled.)

Incorrect choice of parameter, for the measured DUT, is best avoided by watching for the negative LC indicator (below the LC display). If this light is on, when the DISPLAY is VALUE or BIN, the principal parameter (L or C) that has been selected is incorrect. If Ls/Q has been selected, try one of the other 4 selections; and vice versa. (Negative LC indication when the DISPLAY is $\Delta C/\Delta L$ means that the percent difference is negative, i.e., the measured value is less than the stored nominal value.)

Equivalent Series R for Capacitors. The total loss of a capacitor can be expressed in several ways, including D and "ESR", which stands for equivalent series resistance. To

obtain ESR, one can measure directly; push the Cs/Rs parameter key.

"Equivalent series resistance" is larger than the actual resistance of the wire leads and foils that are physically in series with the heart of a capacitor. ESR includes also the effect of dielectric loss. Generally, measured ESR is closer to actual series resistance for capacitors with lower reactance (larger capacitance and/or higher test frequency).

Series and Parallel Equivalent Circuits. **Figure 3-10.**

An impedance that is neither pure reactance nor a pure resistance can be represented at any specific frequency by either a series or a parallel combination of resistance and reactance. Keeping this concept in mind will be valuable in operation of the instrument and interpreting its measurements. The values of resistance and reactance used in the equivalent circuit depend on whether a series or parallel combination is used. The equivalent circuits are shown in the accompanying figure, together with useful equations relating them. Notice that the Digibridge displays measurement results directly in terms of series parameters if you select Ls/Q, Cs/D, or Cs/Rs; in terms of parallel parameters if you select Cp/Gp.

If you need Lp, calculate it from measured Ls and D or Q, using the formulas given in the figure. Notice that the instrument will make a valid measurement of Gp for an inductor when the selected parameter is Cp/Gp, even though the negative LC indicator is lighted. (The measured value of negative capacitance is correct, but requires interpretation.)

3.5.2 Measurement Modes.

Continuous. Select CONT for automatically repeating measurements, at one of 2 rates (approximately 2 or 4 per second) as you choose SLOW or FAST. The displays will NOT be held after the DUT is removed or changed. Although there may be some annoyance due to changeability of the least significant digits in the displays, this mode provides a rapidly updated "current" measurement automatically. So it is the normal mode.

Single. Select SINGLE for a measurement to be made with each depression of the START button. The resulting LC and QDRG displays are held until a subsequent measurement is made, regardless of changing the DUT. This mode is suitable for many kinds of "production" testing programs.

Average. Select AVERAGE for a string of 10 measurements to be made after each depression of the START button. A running average is displayed; that is, each time a measurement is completed, the LC and QDRG displays are updated to be the average of all measurements made since "start". After the 10th measurement (5 s after "start", if selected RATE is SLOW), the displays are held, as described above. This mode provides smoothing of any possible "noise" or slight variation from one measurement to another theoretically identical measurement, in a particularly convenient way.

Resistance and Inductance

$$Z = R_s + j\omega L_s \qquad Z = \frac{j\omega L_p R_p}{R_p + j\omega L_p} \qquad Z = \frac{R_p + jQ^2\omega L_p}{1 + Q^2}$$

$$Q = \frac{1}{D} \qquad Q = \frac{\omega L_s}{R_s} \qquad Q = \frac{R_p}{\omega L_p}$$

$$L_s = \frac{Q^2}{1 + Q^2} L_p \qquad L_s = \frac{1}{1 + D^2} L_p$$

$$L_p = \frac{1 + Q^2}{Q^2} L_s \qquad L_p = (1 + D^2) L_s$$

$$R_s = \frac{1}{1 + Q^2} R_p \qquad R_p = (1 + Q^2) R_s$$

$$R_s = \frac{\omega L_s}{Q} \qquad R_p = Q\omega L_p \qquad R_p = \frac{1}{G_p}$$

Resistance and Capacitance

$$Z = R_s + \frac{1}{j\omega C_s} \qquad Z = \frac{R_p}{1 + j\omega R_p C_p} \qquad Z = \frac{D^2 R_p + 1/(j\omega C_p)}{1 + D^2}$$

$$D = \frac{1}{Q} \qquad D = \omega R_s C_s \qquad D = \frac{1}{\omega R_p C_p}$$

$$C_s = (1 + D^2) C_p \qquad C_p = \frac{1}{1 + D^2} C_s$$

$$R_s = \frac{D^2}{1 + D^2} R_p \qquad R_p = \frac{1 + D^2}{D^2} R_s$$

$$R_s = \frac{D}{\omega C_s} \qquad R_p = \frac{1}{\omega C_p D} \qquad R_p = \frac{1}{G_p}$$

Figure 3-10. Equivalent circuits for a lossy inductor and a lossy capacitor.

3-12 OPERATION

3.6 LIMITS, BINS, GO/NO-GO, AND PERCENT DELTAS.

3.6.1 Introduction.

If a group of similar DUT's are to be measured, it is often convenient to use the limit-comparison capability of the Digibridge to categorize the parts. This can be done *in lieu of* or *in addition to* recording the measured value of each part. For example, the instrument can be used to sort a group of nominally 2.2-pF capacitors into bins of 2%, 5%, 10%, 20%, lossy rejects, and other rejects. Or it can assign DUTs to bins of (for example) a 5% series such as 1.8, 2.0, 2.2, 2.4, 2.7 pF, etc. The bin assignments can be displayed, for guidance in hand sorting, or (with the interface option) output automatically to a handler for mechanized sorting.

Up to 8 regular bins are provided for, in addition to a bin for QDRG rejects and a bin for all other rejects; total = 10 bins. To set up the desired categories, use the 16 limits-entry keys in the left rear part of the keyboard, as described below.

Limits are normally entered in pairs (defining the upper and lower limits of a bin), in the form of "nominal value" and "percent" above and below that nominal. If only one "percent" value is entered for a bin, the limit pair is symmetrical (such as ±2%). Two "percent" values must be entered, the higher one first, to set up a non-symmetrial pair of limits. Any overlapping portion of 2 bins is automatically assigned to the lower-numbered bin.

For simple GO/NO-GO testing, set up a QDRG limit and 1 regular bin. Entry of limits in additional bins will define additional GO conditions. Be sure the unused bins are closed. (Bins 1 . . . 8 are initially closed, at power-up.)

3.6.2 Limit Entry Methods. Figures 3-11, 3-12.

The figures illustrate 2 basic methods of limit entry: nested and sequential. Nested limits are the natural choice for sorting by tolerance around a single nominal value. The lower numbered bins must be narrower than the higher numbered ones. Symmetrical limit pairs are shown; but unsymmetrical ones are possible. (For example, range AB could be assigned to bin 3 and range FG to bin 4 by use of unsymmetrical limit pairs in these bins.)

Sequential limits, on the other hand, are the natural choice for sorting by nominal value. Any overlap is assigned to the lower numbered bin; any gap between bins defaults to bin 9. The usual method of entry uses a redefined nominal value for each bin, with a symmetrical pair of limits. If it is necessary to define bins without overlap or gaps, use a single nominal value and unsymmetrical limit

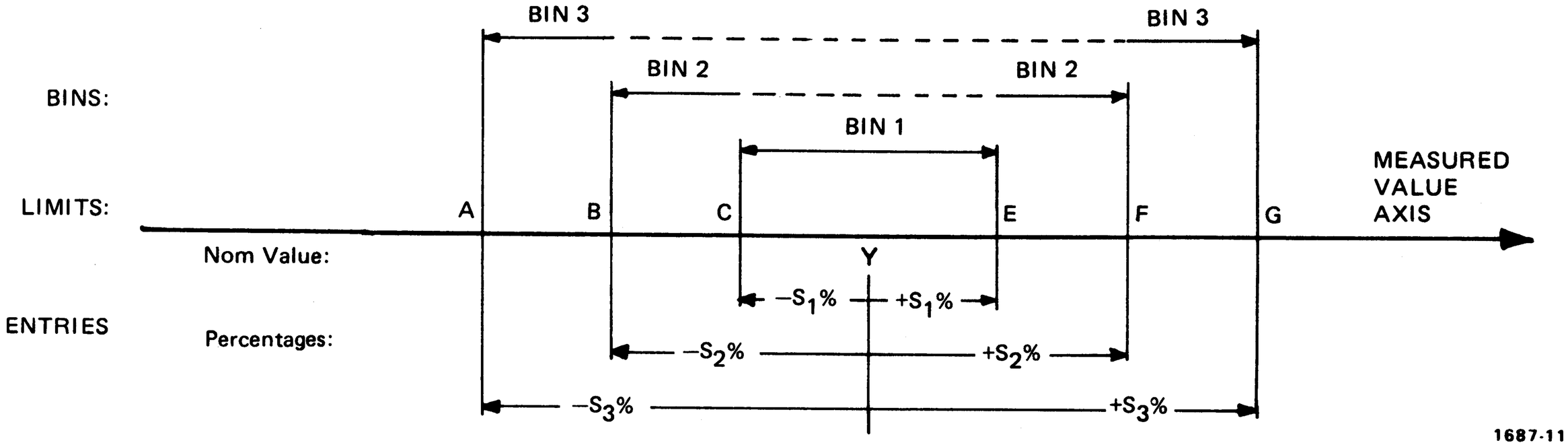

Figure 3-11. Nested limits. A single nominal value Y is used and all limit pairs are symmetrical in this basic plan.

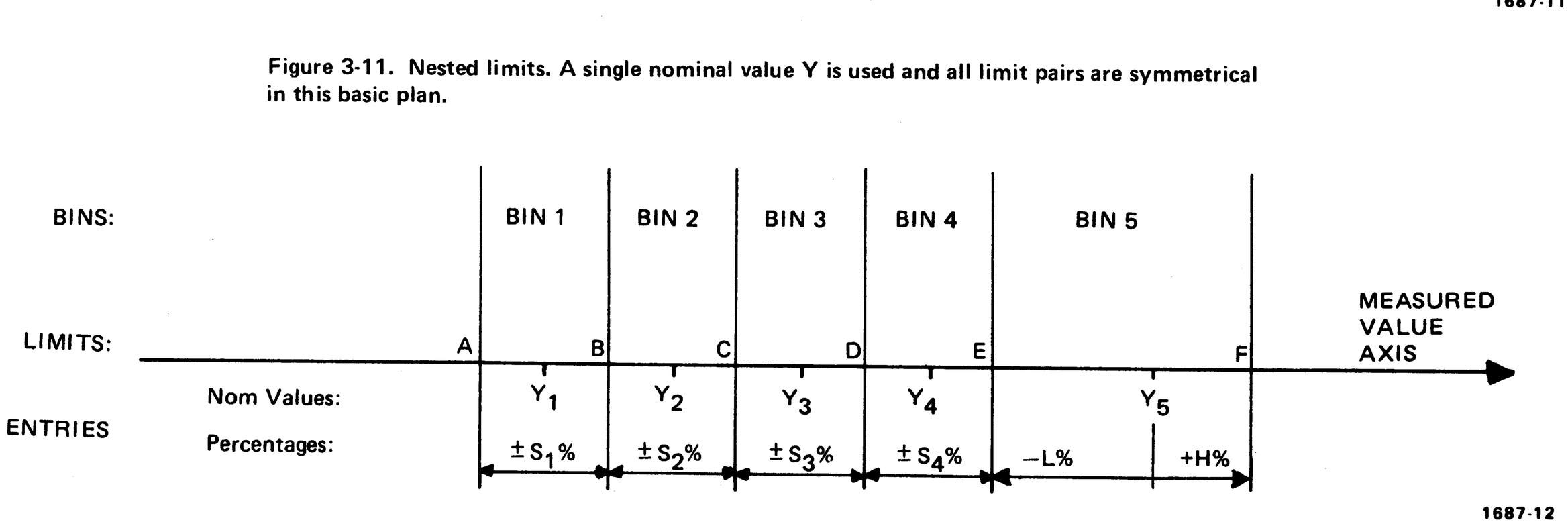

Figure 3-12. Sequential limits. A different nominal value is entered for each bin, and all limit pairs are symmetrical except for the unsymmetrical pair shown for example in bin 5.

pairs. It is possible to set up one or more tighter-tolerance bins within each member of a sequence.

3.6.3 Limit Entry Procedure.

a. With DISPLAY key, select VALUE.

b. With FUNCTION key, select ENTER.

c. With parameter key Ls/Q, Cs/D, Cs/Rs, or Cp/Gp (by repeat keying if necessary) select convenient units as shown in the display.

d. Enter the desired QDRG limit by keying:

[X] [=] [BIN] [0],

in which X represents 1 to 5 numerical keys and (optionally) the decimal-point key, depressed in sequence. Confirmation is shown on the QDRG display, up to 4 significant digits.

e. Enter a nominal value for limits by keying:

[Y] [=] [NOM VALUE],

in which Y represents 1 to 5 numerical keys and (optionally) the decimal-point key, depressed in sequence. Confirmation is shown on the LC display. Notice that the units were selected in step c.

f. For a symmetrical pair of limits (centered on the nominal value just entered), enter one percentage, by keying:

[S] [%] [=] [BIN] [Z];

in which S represents 1 to 5 numerical keys and (optionally) the decimal-point key, depressed in sequence, forming a number not exceeding 100.00; and Z represents one key for the chosen bin: 1, 2, 3, 4, 5, 6, 7, or 8. Confirmation is shown, upper limit on the LC display, lower limit (4 significant digits) on the QDRG display. Notice that these displays are actual L or C values, not percentages.

g. For an unsymmetrical pair of limits, similarly, key in:

[H] [%] [–] [L] [%] [=] [BIN] [Z];

in which H represents a number not exceeding 10000 and L a number not exceeding 100.00. Both H and L (or neither) may have a negative-sign prefix; but H must always yield a higher limit (absolute value) than L.

h. To enter another pair of limits based on the established nominal value, repeat step f or g, choosing another bin number.

i. To enter another pair of limits based on a different nominal value, repeat step e and then step f or g, similarly.

j. To change the limits in any of the 8 bins, reenter the pair, as above.

k. To close a bin that has limits entered in it, repeat step f with zero for S. Confirmation is shown by 2 identical numbers appearing in the LC and QDRG displays.

l. To resume operation of the Digibridge, using the limits entered as above, press the DISPLAY key. The display will be either measured VALUE, or BIN, whichever you select. In either case, if you have the Interface Option, the available output data are not limited to the display selection.

3.6.4 Example — Entry of Sequential Limits.

To enter a set of sequential limits, operate the keyboard as described below for the following capacitor sorting example: D < .005, C = 91, 100, 110, 120, 130 pF (the standard 5% series).

a. With DISPLAY key, select VALUE.

b. With FUNCTION key, select ENTER.

c. With parameter key Cs/D, select LC units: pF.

d. Enter D limit: [.] [0] [0] [5] [=] [BIN] [0].

e. Enter nominal LC value: [9] [1] [=] [NOM VALUE].

f. Set bin 1 limits: [5] [%] [=] [BIN] [1].

g. Redefine nominal: [1] [0] [0] [=] [NOM VALUE].

h. Set bin 2 limits: [5] [%] [=] [BIN] [2].

i. Redefine nominal: [1] [1] [0] [=] [NOM VALUE].

j. Set bin 3 limits: [5] [%] [=] [BIN] [3].

k. Redefine nominal: [1] [2] [0] [=] [NOM VALUE].

l. Set bin 4 limits: [5] [%] [=] [BIN] [4].

m. Redefine nominal: [1] [3] [0] [=] [NOM VALUE].

n. Set bin 5 limits: [5] [%] [=] [BIN] [5].

o. Close bin 6 (if open): [0] [%] [=] [BIN] [6].

p. Close bins 7 and 8, similarly (if used before).

3.6.5 Entries in General.

For additional detail, refer to the condensed instructions on the reference card under the Digibridge, and to the following notes.

Bin 0. The limit entered in bin 0 is always QDRG. For D, Rs, or Gp, it is an upper limit. For Q only, it is a lower limit.

Unsymmetrical Limit Pairs. Enter 2 percentages for the bin. One or both may be + (unspecified sign) or –. Enter first the one that yields the larger absolute value of LC.

Unused Bins. Initially, at power-up, bins 1 . . . . 8 are closed so that unused ones can be ignored. Every unused bin that has previously been used (except 9) must be closed by entering 0%, as in the above examples. Once closed, it will stay closed until non-zero percent limits are inserted.

Allowable Limits. Positive limits up to 10 000%, negative limits down to –100%, maximum of 5 significant figures (for example: 38.671%).

Bin Order. Optional except for nested bins; be sure the narrower limit pairs go into lower numbered bins (because all overlap goes to the lower bin).

Inhibiting Comparisons. To inhibit QDRG comparisons, set bin 0 to zero. To inhibit all comparisons, set NOM VALUE to zero. (Then GO/NO-GO indicators stay off.) Subsequent setting of NOM VALUE to any number except zero enables all comparisons as previously set up.

When POWER is switched ON, "nominal value" is initialized at zero. (Comparisons are inhibited.)

Changing Entries. Enter new value(s) — or a zero — to delete obsolete or erroneous nominal value or bin limits. Do not attempt to change or enter a single separate limit in a bin; any single percentage entered for a bin will be inter-

preted as a symmetrical pair of limits. Changing "nominal value" does not change any limits, but does determine the base for subsequent limit entries for specific bins.

Sorting Resistors. Do not attempt to sort resistors into several bins, because there are only 2 possible categories for QDRG sorting. There are other Digibridge models well suited to measuring and sorting resistors.

3.6.6 Verification of Nominal and Limit Values.

While the DISPLAY selection is ENTRY, the exact values entered into the Digibridge can be seen by either of 2 methods, as follows.

During the Entry Process. A confirming display is automatically provided immediately after the final keystroke of each entry step. For example, after the [NOM VALUE] keystroke, the entered value appears on the LC display. After the [BIN] and number keystrokes, the actual limits of LC value (not percentages) appear across the full display area: upper limit on the regular LC display, lower limit (minus the least significant digit) in the regular QDRG display area. For bin 0, the QDRG limit appears in the QDRG area.

Upon Demand. To see the current "nominal value," depress the [NOM VALUE] key (while the ENTRY light is lit). To see the limits in any particular bin (or to verify that it has been closed), depress [BIN] and the desired number, similarly. Displays selected in this way are limited by the units that are shown on the panel.

However, any "nominal values" previous to the current one are lost and cannot be displayed (unless entered again). Bin limits are not lost until replaced by new entries in the particular bin; but they *are* lost when POWER is switched OFF.

3.6.7 Percent-Difference — ΔC/ΔL.

This Digibridge will display (if desired) percent-difference of the measured L or C from a previously stored reference. (The other 2 alternative displays are measured value or bin number.) There are 2 ways to store the reference for percent-difference (delta) measurements: measured-value storage and keyed-number storage, as described below.

Measured-Value Storage. To store the current L or C measurement as reference for percent-difference measurements, follow this procedure.

a. Set FUNCTION to MEASURE.
b. Set MEASURE MODE to AVERAGE.
c. Set DISPLAY to VALUE.
d. Press START button; wait for complete measurement.
e. Press [NOM VALUE] key.

Keyed-Number Storage. To store any desired value as reference, similarly, follow this procedure.

a. Set FUNCTION to ENTER.
b. Enter the desired nominal value through the keyboard.

For example, to enter 15, key in:

[1] [5] [=] [NOM VALUE].

Percent-Difference Display. To obtain a display of percent-difference (measured value vs stored reference), this is the procedure in brief.

a. Set FUNCTION to MEASURE.
b. Set DISPLAY to Delta C/Delta L (ΔC/ΔL).
c. Observe that the next measurement(s) is now percent-difference from the stored reference (NOT an absolute value).

3.6.8 Value, ΔC/ΔL, Bin, and Go/No-Go Displays.

The Digibridge measurement will be displayed in one of three ways: VALUE, ΔC/ΔL, or BIN (any one for a single measurement). This distinction is unimportant for most measurements, in the continuous mode. But for single or average-mode operation, select the desired display before pushing START. Details follow.

For any of these displays, select MEASURE with the FUNCTION key.

Value. Select VALUE with the DISPLAY key. When measurement is completed, the value will be shown on the LC and QDRG displays.

Percent-Difference. Select Delta C/Delta L (ΔC/ΔL) with the DISPLAY key. Observe that the next measurement(s) is now percent-difference from the stored reference (NOT an absolute value).

Bin. Select BIN with the DISPLAY key. When measurement is completed, the bin assignment will be shown on the LC display (a single digit), with the following significance:

0 = No-Go because of Q, D, R, or G limit
1 = Go, bin 1
2 = Go, bin 2
. . . Go, bin 3, 4, 5, 6, 7, or 8, as indicated.
9 = No-go by default (suits no other bin).

GO/NO-GO. If comparison is enabled, by a non-zero entry for "nominal value" (see para 3.6.5), this indication is provided. The DISPLAY selection can be VALUE, ΔC/ΔL, or BIN. GO means the measurement falls in bin 1 . . . 8; NO-GO means bin 0 or 9.

3.7 BIAS.

WARNING

- **Maximum bias voltage is 60 V. Do NOT exceed.**
- **Bias voltage is present at connectors, probe, test fixtures, and on capacitors under test.**
- **Capacitors remain charged after measurement.**
- **Do not leave instrument unattended with bias "on."**

To measure capacitors with dc bias voltage applied, use the following procedure.

a. Connect a bias supply via rear-panel connector,

observing polarity, as described in para 2.6. Generally, the external circuit should include switching for both application of bias and discharge of the DUT.

b. Use the EXT BIAS switch on the keyboard to apply bias (ON) and to discharge the DUT (OFF), except as follows. Use of a charge/discharge switch in the external bias circuit is recommended for production-quantity measurements, to avoid unnecessary wear on the EXT BIAS switch.

c. Be sure to orient the DUT correctly (positive terminal to the left in the 1687-9600 test fixture).

d. Operate the bridge in the usual way. Disregard any measurements that may be made by the Digibridge in continuous measurement mode during the charge or discharge transients. Notice that the BIAS ON light indicates the presence of bias voltage; it goes off when the voltage drops to zero even though the EXT BIAS switch may be ON. This indicator will not light if the bias power supply polarity is inverted.

Notice that exceeding the 60-V limit of bias voltage is hazardous to personnel. It is also liable to damage the Digibridge.

3.8 OPERATION WITH A HANDLER.

If you have the interface option and have made the system connections to a handler (para 2.7), the essential Digibridge operating procedure is as follows:

a. Enter the bin limits as described above.

b. Select the measurement conditions as desired: MEASUREMENT RATE, MEASUREMENT MODE (SINGLE). (Do NOT change parameter after limits have been entered.)

c. Select either BIN or VALUE DISPLAY for incidental monitoring of measurements while the handler automatically sorts the parts being processed.

CAUTION Be sure Digibridge power is OFF while any connections are made or broken at the IEEE-488 INTERFACE connector or its cable. Otherwise, calibration may be lost.

3.9 SYSTEM CONSIDERATIONS.

These considerations apply only if you have the interface option. (If you do, there will be interface connectors at the rear.)

3.9.1 IEEE-488 Interface Unused.

If there is no system connection to the IEEE-488 INTERFACE connector, be sure to keep the TALK switch set to TALK ONLY.

3.9.2 Talk-Only Use.

This pertains to a relatively simple system, with the Digibridge outputting data to one or more "listen-only" (IEEE-488 compatible) devices such as a printer.

Operate the Digibridge in the usual way (manually). The system may constrain operation in some way. For example, a slow printer will limit the measurement rate because it requires a certain time to print one value before it can accept the next.

3.9.3 Talk/Listen Use.

Observe the REMOTE CONTROL indicator light. If it is lighted, there is no opportunity for manual operation (except entry of limits). The displays may be observed then, but their content is controlled by the system controller, via the IEEE-488 bus.

Entry of Limits. Any remotely controlled systems use involving limit comparisons must be designed for manual entry of limits, as follows.

a. Be sure the REMOTE CONTROL light is out.

b. Enter the limits as described in para 3.6.

c. Enable the controller to proceed. (This step may require attention to controls on some other device in the system besides the Digibridge.)

Theory–Section 4

4.1 INTRODUCTION 4-1
4.2 PRINCIPAL FUNCTIONS 4-3

4.1 INTRODUCTION.

4.1.1 General.

This instrument uses an unusual method of measurement, which is quite different from those used in most impedance meters or bridges. A thorough understanding of this method will be helpful in unusual applications of the instrument and be useful in trouble analysis, in case of a possible malfunction. The following paragraph gives a brief overall description outlining the measurement technique to one familiar with impedance measurement methods. A more detailed description of operation, specific circuitry, and control signals is given later.

4.1.2 Brief Description of the 1687 Digibridge.

This Digibridge™ uses a new measurement technique, in which a microprocessor calculates the desired impedance parameters for each measurement from a series of 6 or 8 voltage measurements (for FAST and SLOW measurement rates, respectively).* These sub-measurements included quadrature (90°) and inverse (180°) vector components of the voltage across a standard resistor Rs carrying the same current as Zx. Each of these sub-measurements is meaningless by itself, because the current through Zx is not controlled. But each set of voltage measurements is made in rapid sequence with the same phase-sensitive detector and analog-to-digital converter. Therefore properly chosen differences between these sub-measurements subtract out fixed offset errors, and ratios between the differences cancel out the value of the common current and the scale factor of the detector-converter.

The quadrature sub-measurements are made by shifting the phase of the test signal, rather than the reference to the phase detector. No precision analog phase shifting or voltage squaring circuitry is required. Correct phase relationships are maintained by generating test signal and reference signals from the same high-frequency source.

There are no critical adjustments in the Digibridge, thanks to the measurement technique. The only precision component in this instrument is a quartz-crystal stabilized oscillator. The impedance standard is a stable resistor (exact value unimportant), but there is no reactance standard. The effective value of the resistance standard is automatically determined each time the Digibridge is recalibrated. (Notice that the ultimate standards are an external capacitor and the oscillator frequency.) The desired parameters of the DUT are calculated by the microprocessor from the set of sub-measurements, known frequency and test-signal phase, and the recalibration data stored in random-access memory.

The microprocessor also controls the measurement sequence, using programs in the ROM memory and stored keyboard selections. The desired parameters — Ls and Q, Cs and D, Cs and Rs, or Cp and Gp — and the test rate, slow or fast, are selected by keyboard control.

Leading zeroes before the decimal point are blanked out of the LC display. Such blanked zeroes are designated with the symbol Ø in some parts of this manual.

4.1.3 Block Diagram Figure 4-1.

The block diagram shows the microprocessor in the upper center connected by data and address buses to digital circuitry including RAM and ROM memories, and peripheral interface adaptors (PIAs).

Analog circuitry is shown in the lower right part of the diagram, where Zx is supplied with a test signal at frequency of 1 MHz from a sine-wave generator, driven by a crystal-controlled digital frequency divider circuit. The phase of the test signal is digitally controlled by the microprocessor, which selects 1 of 4 phases (precisely 90° apart) for each the 6 or 8 sub-measurements that provide data to it for a single measurement of the DUT. The front-end amplifier circuit supplies an analog signal that represents 2 impedances alternately: the internal standard, Rs, and the DUT, Zx.

The detector control circuit provides sampling commands. The detector is a dual-slope converter, including an integrator and comparator, which converts each analog sub-measurement signal proportionally into a period of time. The dual-slope measurement is converted into a digital number by a counter that is gated by this period.

From this information and criteria selected by the keyboard (or remote control), the microprocessor calculates the LC and QCRG values subsequently displayed.

*Patent applied for.

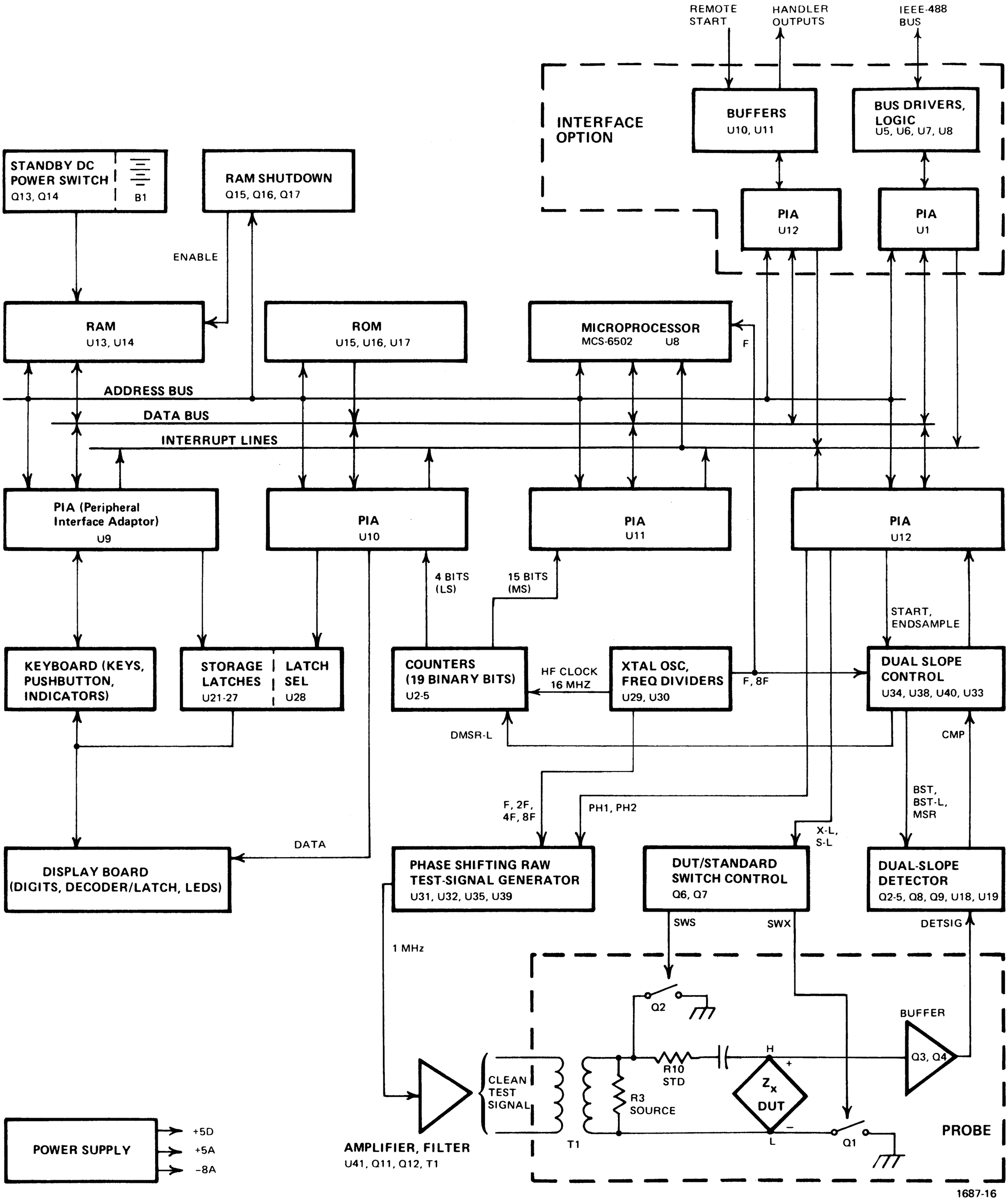

Figure 4-1. Functional block diagram.

4-2 THEORY

4.2 PRINCIPAL FUNCTIONS.

4.2.1 Elementary Measurement Circuit. Figure 4-2.

The measurement technique is shown diagrammatically. A sine-wave generator drives current Ix through the DUT Zx and standard resistor Rs in series. An amplifier with gain K produces voltages e_1 and e_2 in sequence, as determined by switching the ground point — these being the voltages across the DUT and the internal resistance standard, respectively. Simple algebra, some of which is shown in the figure, leads to the expression for the "unknown" impedance:

$$Zx = Rs\,[e_1/e_2]$$

Notice that this ratio is complex. Both a magnitude and a loss (or quality) value are automatically calculated from Zx and frequency.

4.2.2 Frequency and Time Source. Figure 4-3.

A necessary standard for accuracy is the frequency of the test signal. Equally important are the precise generation of 4 phases of the test signal and clocks for the microprocessor. Frequency and timing requirements are implemented by derivation from a single very accurate oscillator, operating at 16 MHz. Digital dividers and logic circuitry provide the many clocks and triggers, as well as driving the sine-wave generator described below.

4.2.3 Sine-Wave Generation. Figure 4-4.

Using an 8-MHz clock, the sine-wave generator produces an 8-step "raw" approximation to a sine wave. This method, with precise timing, minimizes harmonics up through the fifth, so that the raw sine-wave is easily filtered to produce a low-distortion test signal. Phase shifting is accomplished by digital control of the component steps, which are formed using a 3-bit D-type flip-flop and a weighting network of resistors. After filtering, the test signal is applied to the measurement circuit in the probe.

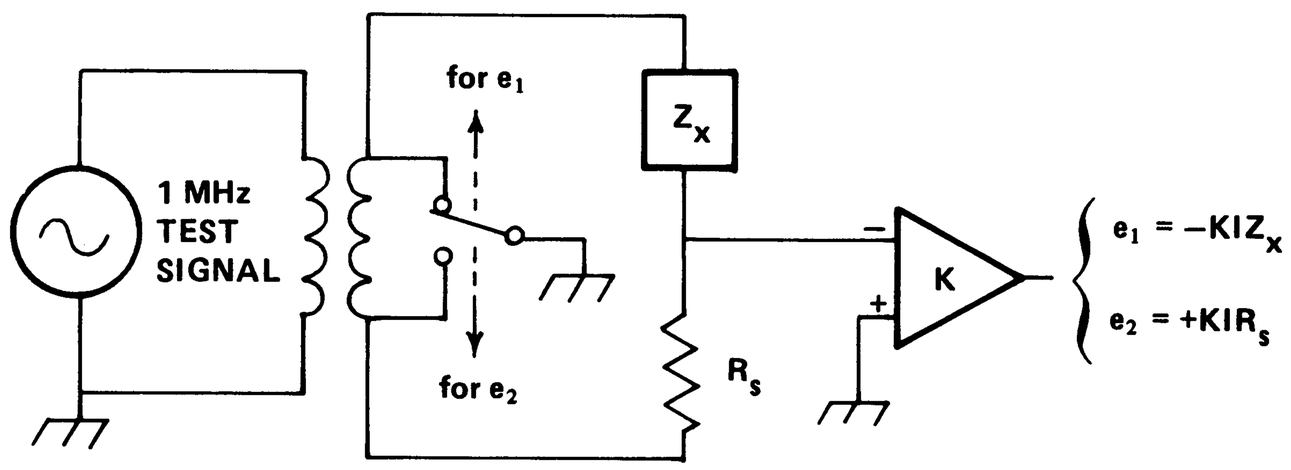

Figure 4-2. Elementary measurement circuit.

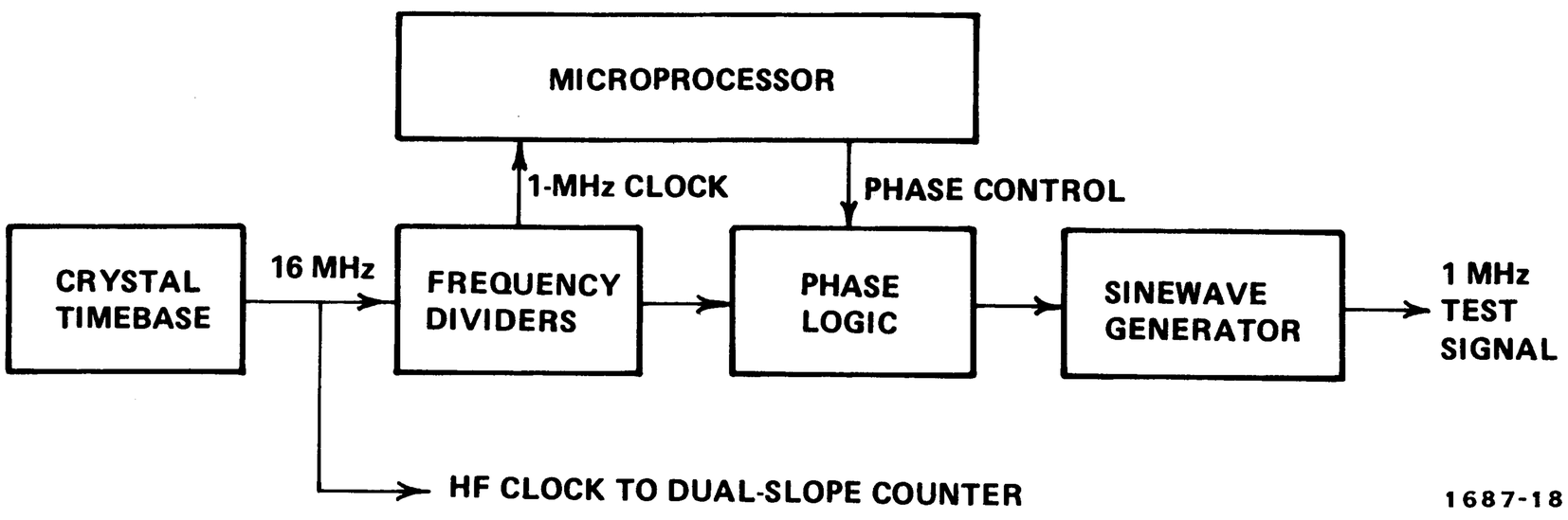

Figure 4-3. Elements of the signal generation and timing circuitry.

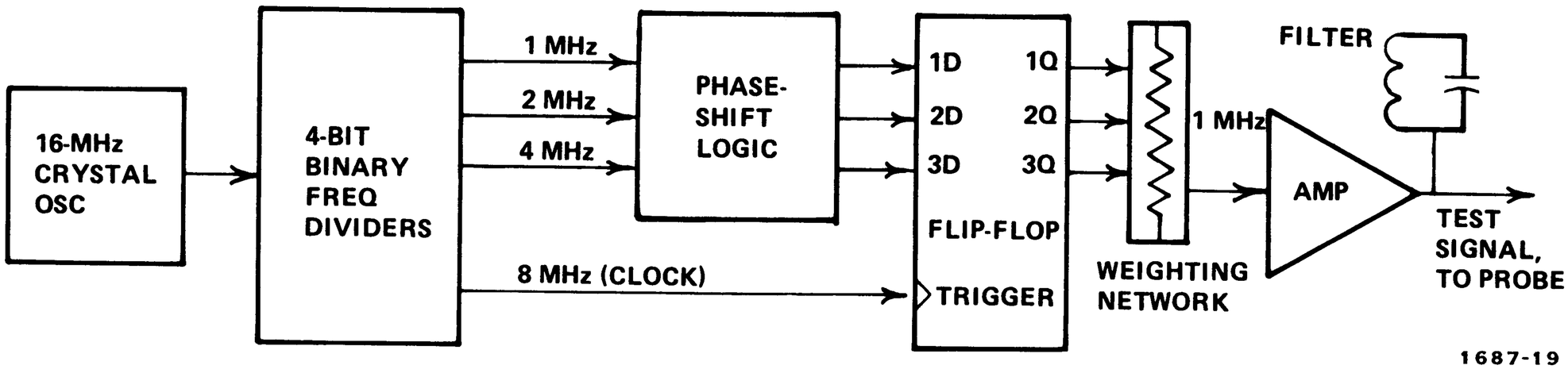

Figure 4-4. Simplified diagram of test signal generator.

Service and Maintenance—Section 5

5.1 CUSTOMER SERVICE 5-2
5.2 INSTRUMENT RETURN 5-2
5.3 REPAIR AND REPLACEMENT OF CIRCUIT BOARDS . . . 5-2
5.4 PERFORMANCE VERIFICATION 5-2
5.5 MINIMUM-PERFORMANCE STANDARDS 5-3
5.6 DISASSEMBLY AND ACCESS 5-7
5.7 PERIODIC MAINTENANCE 5-12
5.8 TROUBLE ANALYSIS 5-14

WARNING

These servicing instructions are for use by qualified personnel only. To avoid electrical shock, do not perform any servicing, other than that contained in the operating instructions, unless you are qualified to do so.

CAUTIONS

For continued protection against fire hazard, replace fuse only with same type and ratings as shown on rear panel and in parts list.

Service personnel, observe the following precautions whenever you handle a circuit board or integrated circuit in this instrument.

HANDLING PRECAUTIONS FOR ELECTRONIC DEVICES SUBJECT TO DAMAGE BY STATIC ELECTRICITY

Place instrument or system component to be serviced, spare parts in conductive (anti-static) envelopes or carriers, hand tools, etc. on a work surface defined as follows. The work surface, typically a bench top, must be conductive and reliably connected to earth ground through a safety resistance of approximately 250 kilohms to 500 kilohms. Also, for personnel safety, the surface must NOT be metal. (A resistivity of 30 to 300 kilohms per square is suggested.) Avoid placing tools or electrical parts on insulators, such as books, paper, rubber pads, plastic bags, or trays.

Ground the frame of any line-powered equipment, test instruments, lamps, drills, soldering irons, etc., directly to earth ground. Accordingly, (to avoid shorting out the safety resistance) be sure that grounded equipment has rubber feet or other means of insulation from the work surface.

The instrument or system component being serviced should be similarly insulated while grounded through the power-cord ground wire, but must be connected to the work surface before, during, and after any disassembly or other procedure in which the line cord is disconnected. (Use a clip lead.)

Exclude any hand tools and other items that can generate a static charge. (Examples of forbidden items are non-conductive plunger-type solder suckers and rolls of electrical tape.)

Ground yourself reliably, through a resistance, to the work surface; use, for example, a conductive strap or cable with a wrist cuff. The cuff must make electrical contact directly with your skin; do NOT wear it over clothing. (Resistance between skin contact and work surface through a commercially available personnel grounding device is typically in the range of 250 kilohms to 1 megohm.)

If any circuit boards or IC packages are to be stored or transported, enclose them in conductive envelopes and/or carriers. Remove the items from such envelopes only with the above precautions; handle IC packages without touching the contact pins.

Avoid circumstances that are likely to produce static charges, such as wearing clothes of synthetic material, sitting on a plastic-covered or rubber-footed stool (particularly while wearing wool), combing your hair, or making extensive erasures. These circumstances are most significant when the air is dry.

When testing static-sensitive devices, be sure dc power is on before, during, and after application of test signals. Be sure all pertinent voltages have been switched off while boards or components are removed or inserted, whether hard-wired or plug-in.

5.1 CUSTOMER SERVICE.

Our warranty (at the front of this manual) attests the quality of materials and workmanship in our products. If malfunction does occur, our service engineers will assist in any way possible. If the difficulty cannot be eliminated by use of the following service instructions, please write or phone the nearest GenRad service facility (see back page), giving full information of the trouble and of steps taken to remedy it. Describe the instrument by name, catalog number, and serial number. (Refer to front and rear panels.)

5.2 INSTRUMENT RETURN.

5.2.1 Returned Material Number.

Before returning an instrument to GenRad for service, please ask our nearest office for a "Returned Material" number. Use of this number in correspondence and on a tag tied to the instrument will ensure proper handling and identification. After the initial warranty period, please avoid unnecessary delay by indicating how payment will be made, i.e., send a purchase-order number.

5.2.2 Packaging.

To safeguard your instrument during storage and shipment, please use packaging that is adequate to protect it from damage, i.e., equivalent to the original packaging. Any GenRad field office can advise or provide packing material for this purpose. Contract packaging companies in many cities can provide dependable custom packaging on short notice. Here are two recommended packaging methods.

Rubberized Hair. Cover painted surfaces of instrument with protective wrapping paper. Pack instrument securely in strong protective corrugated container (350 lb/sq in. bursting test), with 2-in. rubberized hair pads placed along all surfaces of the instrument. Insert fillers between pads and container to ensure a snug fit. Mark the box "Delicate Instrument" and seal with strong tape or metal bands.

Excelsior. Cover painted surfaces of instrument with protective wrapping paper. Pack instrument in strong corrugated container (350 lb/sq in. bursting test), with a layer of excelsior about 6 in. thick packed firmly against all surfaces of the instrument. Mark the box "Delicate Instrument" and seal with strong tape or metal bands.

5.3 REPAIR AND REPLACEMENT OF CIRCUIT BOARDS.

This instruction manual contains sufficient information to guide an experienced and skillful electronic technician in fault analysis and the repair of some circuits in this instrument. If a malfunction is localized to one board (or more) that is not readily repairable, it can be returned to GenRad for repair. To save time, we recommend that you obtain a replacement first, as described below, before returning the faulty board.

Exchanges. For economical, prompt replacement of any etched-circuit board, order an exchange board. Its price is considerably less than that of a new one. Place the order through your nearest GenRad repair facility. (Refer to the last page of this manual.) Be sure to request an exchange board and supply the following information:

1. Instrument description: name and catalog and serial numbers. Refer to front and rear panels.
2. Part number of board. Refer to the parts lists in this manual. (The number etched in the foil is generally NOT the part number.)
3. Your purchase order number. This number facilitates billing if the unit is out of warranty and serves to identify the shipment. The repair facility will arrange for the prompt delivery of a replacement.

To prevent damage to the board, return the defective board in the packing supplied with the replacement (or equivalent protection). Please identify the return with the Returned Material (RM) number on the tag supplied with the replacement and ship to the address indicated on the tag.

New Boards. For equally prompt replacement of any etched-circuit board, and for maximum life expectancy, order a new one. Use the same procedure as described above, but request a new board. Please return the defective one to GenRad.

5.4 PERFORMANCE VERIFICATION.

This procedure is recommended for verification that the instrument is performing normally. No other check is generally necessary because this procedure checks operation of nearly all the circuitry. There are very few calibrations or adjustments that could require resetting; and the internal standards are very stable. (However, for a rigorous performance and accuracy check, refer to para 5.5.) The necessary resistors and capacitors are inexpensive and readily obtained. The most accurate ones available should be used; tolerances listed are the "best" commonly catalogued. Refer to Table 5-1.

CAUTION

Be sure the line voltage switch, rear panel, is correctly set for your power line voltage.

Verify performance as follows:

a. Install the 1687-9600 test fixture as described in para 3.2.

b. Set the line voltage switch, connect the power cord, and depress the POWER button.

Table 5-1
RESISTORS AND CAPACITORS

Name	Type*	Nominal Value	Tolerance
Resistors, metal film	MIL-R-10509C Style RN60	100 Ω	0.1%
		1 kΩ	0.1
		10 kΩ	0.1
Capacitors, mica	Arco: ADM-15-101J	100 pF	0.5
	ADM-15-201J	200 pF	0.5
	ADM-15-102J	1000 pF	0.5

*Equivalents may be substituted.

Table 5-2
PERFORMANCE VERIFICATION

Check Number	Parameter	DUT	LC Display Extremes*	QDRG Display Extremes*
1	Cs/Rs	100 Ω	(disregard)	99.65 to 100.4 Ω
2	Cs/Rs	1 kΩ	(disregard)	997.7 to 1003 Ω
3	Cs/Rs	10 kΩ	(disregard)	9.963 to 10.04 kΩ
4	Cs/D	100 pF	99.410 to 100.59 pF	(.0000 to .0300)
5	Cs/D	200 pF	198.84 to 201.16 pF	
6	Cs/D	1000 pF	993.50 to 1006.5 pF	

*Refer to paragraphs headed "Tolerances" and "Insignificant figures," in the accompanying text.

c. Press the MEASURE RATE key as many times as necessary to select SLOW. For DISPLAY, verify that the VALUE light is on. (If necessary, operate the corresponding key.)

d. Perform the open/short calibration as described in para 3.4.2.

e. Press the FUNCTION key as many times as necessary to select MEASURE. For MEASURE MODE, verify that the CONT light is on. (If necessary, operate the corresponding key.)

f. Press parameter key Rs/Cs and verify that any one of the corresponding units is indicated on the display panel (kΩ or Ω).

g. Set the EXT BIAS slide switch to OFF. Set the TALK switch (rear panel, provided only with the Interface Option) to TALK ONLY.

h. Insert the 100-ohm resistor as the device under test or "unknown" component (DUT).

i. Verify that the displays fall on or between the extremes shown in "check number 1" in Table 5-2, if the resistor value is within the tolerance listed above.

j. Similarly make the other checks indicated in this table.

Tolerances. Acceptable performance of the instrument is bracketed by the set of display "extremes" in Table 5-2. These are defined as the nominal (ideal) measurements plus-or-minus the sum of the instrument accuracy tolerance and the DUT accuracy tolerance (or slightly more). If the accuracy of your DUT is different from the recommendation, revise the acceptable "extremes" accordingly. Notice that this performance verification is NOT intended to prove the accuracy of the instrument.

Insignificant figures. The right-hand digit(s) of the display normally flicker and change if they are not significant for the specified accuracy of the instrument. Refer to para 3.3.

5.5 MINIMUM PERFORMANCE STANDARDS.

5.5.1 General.

This procedure is a more rigorous alternative to the performance verification described above. Precision standards of impedance are required for this procedure, which checks the accuracy as well as the overall performance of the instrument. It will be controlled from the front panel, without disassembly. Table 5-3 lists the recommended standards and associated equipment.

Verify that the instrument meets performance specifications as follows.

Calibration of Standard. The acceptable LC or QDRG readout (min to max range) may have to be modified if the actual (calibrated) value of your standard or its accuracy (either or both) is different from the tabulated value(s). An example is given in the detailed procedure.

Insignificant Digits. The right-hand digit(s) of the display normally may flicker and change if they are not significant

Table 5-3

EQUIPMENT FOR ACCURACY VERIFICATION AND TROUBLE ANALYSIS

Name	Requirements		Recommended Type*
Text Fixture	(Necessary accessory)		GR 1687-9600 (-P1)
Adaptor	GR 900 (reference standard) to test fixture		GR 1687-9602 #
Open	GR 900 open-circuit termination		GR 0900-9981 (-WO) #
Adaptor (2 required)	GR 874® and binding posts		GR 0874-9870 (-Q2)
Short	GR 900 short-circuit termination		GR 0900-9971 (-WN) #
Capacitors	GR 900 coaxial capacitance std,	1 pF, 0.2%	GR 1405-9700 (-E)
		10 pF, 0.04%	GR 1405-9703 (-B)
		100 pF, 0.05%	GR 1406-9704 (-D) #
		1000 pF, 0.05%	GR 1406-9701 (-A)
	Variable, 90 to 120 pF, resolution	0.1 pF	GR 1422-9916 (-CB)
	Mica,	100 pF, 0.5%	Sangamo D7
		240 pF, 10%	Arco ADM-15-241
		1000 pF, 0.5%	Arco ADM-15-102J
Resistors	Precision low-L film	20 Ω, 0.25%	IRC type CCA
		100 Ω, 0.1%	IRC type CEA T-2
		200 Ω, 0.1%	IRC type CCA
		1 kΩ, 0.02%	IRC type AR40
		10 kΩ, 0.05%	Vishay S102
Scope**	General purpose, 100 MHz, dual trace		Tektronix 465
Scope probe**	Capacitance less than 10 pF, X10		Tektronix P6053B
Voltmeter**	Digital, general purpose, with probe		Data Precision 3500
Counter**	DC to 35 MHz, 10 V rms		GR 1192-B

*Equivalents may be substituted, if same accuracy is realized.
**Required for trouble analysis (para 5.8); not required for para 5.5.
#Included in calibration kit 1687-9605.

for the specified accuracy of the instrument, if the MEASURE MODE is CONT. Refer to para 3.3. If this kind of display is confusing, use AVERAGE MEASURE MODE, remembering to initiate measurements with START and to wait 5 seconds for averaging. Refer to para 3.5.

5.5.2 Calibration Setup.

Make the test setup as follows.

a. Regulate the ambient temperature to 23° ± 3°C.

b. Connect the test fixture to the Digibridge and install the reference-standard adaptor. Refer to para 3.2.

c. Set the EXT BIAS slide switch to OFF. Set the TALK switch (rear panel, provided only with the Interface Option) to TALK ONLY.

d. Set the line voltage switch, connect the power cord, and depress the POWER button, as described in para 3.1. Allow 40 minutes "warmup," for stabilization.

5.5.3 Full Recalibration and Capacitance Checks.

Continuing after the setup procedure above, calibrate the Digibridge with capacitance standards and check accuracy with other capacitance standards as follows. Refer to para 3.4 for details.

a. Calculate this difference:

(certified value of 100-pF standard) − (0.172 pF).

b. Set FUNCTION to ENTER.

c. Use normal entry procedure to enter, as nominal, the value determined in step a. For example, if the standard was 100.15 pF, you would key in:

[9] [9] [.] [9] [8] [=] [NOM VALUE].

d. Perform the open/short calibration as described in para 3.4 and summarized here:

- Set FUNCTION to CAL. Press CAL key. (CAL indication is now OPEN.)
- Install the precision open-circuit termination; keep hands away.
- Press START and wait 5 s. (CAL changes to SHORT.)
- Install the precision short-circuit termination in place of the open.
- Press START and wait 5 s. (CAL changes to STAND; the LC display becomes 55555.)

e. Install the GR 1406-D (100 pF) in place of the short.

f. Initiate the scale calibration process (which erases previous full recalibration of the Digibridge) by pressing these keys in sequence:

[=] [NOM VALUE] [START].

Notice that the LC display goes out after you press NOM VALUE. After START, wait for the STAND indication to go off and the NO-GO light to come on.

5-4 SERVICE

g. Set up the following conditions for measurement:

FUNCTION – MEASURE
DISPLAY – ΔC/ΔL
MEASURE RATE – SLOW
MEASURE MODE – CONT
Parameter – Cs/D.

h. Verify that the displays are:

LC display (%) = **–Ø.085** (min) to **Ø.085** (max).
QDRG display = .0000 or .0001.

i. Check as follows that the calibration data are properly retained.

- Switch POWER OFF and wait at least 1 minute.
- Switch POWER ON again.
- Repeat steps b, c, g, and h.

j. Set up the following conditions for measurement:

FUNCTION – MEASURE
DISPLAY – VALUE
MEASURE RATE – SLOW (initially)
MEASURE MODE – CONT (or AVERAGE)*
Parameter – Cp/Gp.

k. Install the 1-pF standard (initially) as DUT, replacing the standard used for calibration.

l. Calculate the effective value of the DUT (explained in para 3.4.4) as follows:

(certified intrinsic C of standard) – (0.172 pF).

m. Refer to Table 5-4 (first line, initially), which gives the range of acceptable display values for nominal effective value of the standard. Mentally correct this range for your particular standard as in the following example. If the certified capacitance were 1.0027, the effective value would be 0.8307. However, the "extremes" shown in lines 1 and 2 of Table 5-4 are based on a nominal of 1.000 pF; so, for this example, subtract a correction of 0.169 pF. For the first line, then, the acceptable range would be

0.961 – 0.169 = ØØ.792; to: 1.039 – 0.169 = ØØ.870;
for the second line, ØØ.691 to ØØ.971 pF.

Also, if you are sure the certified value is correct to a particular accuracy (for example, 0.3%), you can "close" or "open" the acceptable extremes accordingly. (Closing them from ±0.5% to ±0.3%, for a 1-pF nominal, would mean adding .002 to the lower and subtracting .002 from the upper extreme.)

n. Complete the checks indicated in the table, by repeating steps k, l, and m, above, for the capacitance standards and measurement rates tabulated. The LC display must fall on or between the corrected tabulated "extremes" in each line.

*If a measured value is difficult to read because of a flickering digit, select AVERAGE and press START. (The display will soon settle to a fixed number.)

5.5.4 Resistance Accuracy Checks.

Continue after the preceding steps, as follows.

a. Install the axial-lead adaptor on the test fixture, replacing the reference standard adaptor. Set the contacts just far enough apart to accept the longest of the precision resistors neatly. The next 5 steps are an open/short calibration for this test-fixture configuration.

b. With FUNCTION key, select CAL.

c. Press the CAL key to select OPEN indication.

d. Keeping hands away from test fixture, press START and wait until CAL indication changes to SHORT (about 5 seconds).

e. Insert a straight piece of bus wire in the test fixture to short-circuit it, without changing the spacing between + and – contacts.

Table 5-4
CAPACITANCE ACCURACY CHECKS

Standard as DUT	Measurement Rate	Typical Standard Accuracy†	Uncertainty of OCC*	Digibridge Accuracy	Accuracy-Sum Percent	Accuracy-Sum Capacitance	LC Display Acceptable Extremes**
1 pF	SLOW	0.5%	0.8%	2.6%	3.9% =	0.039 pF	ØØ.961 to Ø1.039 pF
	FAST			12.7	14.0	0.140	ØØ.860 to Ø1.140
10	SLOW	0.14	0.08	0.30	0.52	0.052	Ø9.948 to 10.052
	FAST			1.50	1.72	0.172	Ø9.828 to 10.172
100	SLOW	0.07	0.01	0.09	0.17	0.17	99.830 to 100.17
	FAST			0.43	0.51	0.51	99.490 to 100.51
1000	SLOW	0.07	––	0.15	0.22	2.2	997.80 to 1002.2
	FAST			0.76	0.83	8.3	991.70 to 1008.3

†A year of aging has been assumed. If your standard's certification is current, or older than 12 months, consider this in the below-mentioned correction.
*The open-circuit capacitance is known to be 0.172 ± .008 pF. The uncertainty of .008 pF is tabulated as percentage of the measurement.
**If the effective value of your capacitance standby is slightly different from the nominal value (assumed) or if the standard's accuracy is different from the typical accuracy, correct the "acceptable extremes" accordingly.

Table 5-5

R ACCURACY CHECKS

Standard as DUT*	Typical Standard Accuracy	Digibridge Accuracy	Accuracy-Sum Percent	Accuracy-Sum Resistance	QDRG Display Acceptable Extremes*
100 Ω	0.1%	0.25%	0.35%	0.35 Ω	99.65 to 100.4 Ω
1 kΩ	0.02	0.13	0.15	1.5	998.5 to 1002 Ω
10 kΩ	0.05	0.27	0.32	32	9.968 to 10.03 kΩ

*If the known value of your precision resistor is slightly different from the nominal value (assumed) or if its accuracy is different from the typical standard accuracy (tabulated), correct the "acceptable extremes" accordingly.

Table 5-6

D ACCURACY CHECKS

Standard R	Standard C	Nominal D*	Accuracies (±) R	Accuracies (±) C	Accuracies (±) D of Standard	Digibridge	Overall	QDRG Acceptable Extremes**
20 Ω	100 pF	0.0127	0.25%	0.5%	0.75% = .0001	.0009	.0010	.0117 to .0137
20	1000	0.1258	0.25	0.5	0.75 = .0010	.0017	.0027	.1231 to .1285
200	1000	1.257	0.1	0.5	0.60 = .0076	.0058	.0134	1.244 to 1.270

*Includes allowance for capacitor D of .0001. If capacitor has slightly higher D, increase the acceptable "extremes" accordingly.
**If the known value of R or C is different from the nominal value (assumed) or if its accuracy is different from that tabulated, correct the acceptable "extremes" accordingly.

f. Press START and wait until CAL indication changes to STAND (about 5 seconds). This completes the open/short calibration.

g. Select measurement conditions as follows:

FUNCTION – MEASURE
DISPLAY – VALUE
MEASURE RATE – SLOW
MEASURE MODE – AVERAGE
Parameter – Cs/Rs.

h. Insert the first precision resistor as DUT in the test fixture, press START, and verify that the QDRG display falls on or between the acceptable "extremes." Refer to Table 5-5. Continue down the table, similarly checking accuracy at each line.

5.5.5 Dissipation-Factor Accuracy Checks.

Continue after the preceding steps, as follows.

a. Insert, as DUT, a series combination of precision resistor and mica capacitor, values listed in the first line of Table 5-6. Make the R/C connection in midair by crossing component leads and clamping them with a small alligator clip or paper clip. Keep the length of the total circuit path through the DUT short; and avoid adding unnecessary stray capacitance.

b. Select measurement conditions:

Parameter – Cs/D.

c. Press START. Verify that the averaged QDRG display falls on or between the acceptable "extremes" tabulated. Continue down the table, checking accuracy at each line.

5.5.6 Conductance Accuracy Checks.

Continue after the preceding steps, as follows.

a. Insert, as DUT, the precision resistor listed in the first line of Table 5-7.

b. Select measurement conditions:

Parameter – Cp/Gp.

c. Press START. Verify that the averaged QDRG display falls on or between the acceptable "extremes" given in the table. Continue down the table to complete the G accuracy checks.

5.5.7 Limits-Entry and Keyboard Checks.

A variable capacitor is used in the following procedure to check the limit comparison functions of the Digibridge. If your capacitor is not the recommended type, it must be calibrated (using the Digibridge if desired) so that the C values specified in the accompanying table can be readily set within ±0.3 pF ; use binding-post adaptors.

a. Connect the variable capacitor as DUT, using 2 plain wire leads from capacitor binding posts to test-fixture adaptor. Use reasonably short leads, well spaced apart from each other; and position the capacitor where it can be reset and observed without moving the leads or adding hand capacitance to the circuit unnecessarily.

b. Set up the conditions for measurement:

FUNCTION – MEASURE
DISPLAY – VALUE
MEASURE RATE – SLOW
MEASURE MODE – CONT
Parameter – Cs/D.

5-6 SERVICE

Table 5-7

G ACCURACY CHECKS

Standard R	Standard Accuracy	Digibridge Accuracy	Accuracy Total	Nominal G	QDRG Display Acceptable Extremes*
10 kΩ	0.05%	0.25%	0.30%	100 μS	99.70 to 100.3 μS
1 kΩ	0.02	0.13	0.15	1 mS	998.5 to 1002 μS
100 Ω	0.1	0.27	0.37	10 mS	9.963 to 10.04 mS
20 Ω	0.25	0.93	1.18	50 mS	49.41 to 50.59 mS

*If the value of a standard differs from nominal or if its accuracy is different from that tabulated, correct the "acceptable extremes" accordingly.

c. Set the capacitor so the LC display becomes 100.00 pF. Observe the capacitor dial. (Subsequent settings must be made without using the Digibridge in this way.)

d. Change FUNCTION to ENTER. Verify that no digits are displayed for LC or QDRG.

e. Depress in sequence the keys shown by the bracketed symbols (and words) in line 1 of Table 5-8; and verify the displays in the same line.

Table 5-8

LIMIT ENTRY SEQUENCE AND DISPLAYS

Limit-Entry Key Sequence	LC Display	QDRG Display
[1] [0] [0] [=] [NOM VALUE]	100.00	(blank)
[.] [0] [1] [=] [BIN] [0]	(blank)	.0100
[1] [%] [=] [BIN] [1]	100.99	99.00
[2] [%] [=] [BIN] [2]	101.99	98.00
[3] [%] [=] [BIN] [3]	102.99	97.00
[4] [%] [=] [BIN] [4]	103.99	96.00
[5] [%] [=] [BIN] [5]	104.99	95.00
[6] [%] [=] [BIN] [6]	105.99	94.00
[7] [%] [=] [BIN] [7]	106.99	93.00
[8] [%] [=] [BIN] [8]	107.99	92.00

f. Repeat step e for each line in the table, in sequence. Each display should appear when the last key in the line is pressed.

g. Change FUNCTION to MEASURE. Verify that the GO light comes on, along with the usual measurement displays.

h. Change DISPLAY to BIN. Verify that the GO light is on, the LC display is simply 1, and the QDRG display is blank.

i. Refer to Table 5-9. Notice that the last line is now represented by the test setup. Reset the variable capacitor and verify the corresponding displays for each line of the table.

j. With conditions unchanged since last line of the table, introduce loss by touching the terminals of the DUT with your fingers. Verify that the displays change from 1, GO to 0, NO-GO. Remove the "finger" loss; and the displays should reutrn to 1, GO.

k. Inhibit limit comparison by setting nominal value to zero as follows:

FUNCTION – ENTER
[0] [=] [NOM VALUE].

Table 5-9

BIN AND GO/NO-GO CHECKS

DUT Capacitance	Principal (LC) Display	GO/NO-GO Indication
101.5 pF	2	GO
102.5	3	GO
103.5	4	GO
104.5	5	GO
105.5	6	GO
106.5	7	GO
107.5	8	GO
108.5	9	NO-GO
100.0	1	GO

l. Verify that the LC display is .00000 and the QDRG display is blank.

m. Set up these conditions.

FUNCTION – MEASURE
DISPLAY – BIN.

There should be no indication of measured value, bin number, or GO/NO-GO, at this step.

n. Change FUNCTION to ENTER.

o. Press parameter key Ls/Q and verify that the units display shows Q, μH. Similarly check other parameter keys as follows.

p. Press Cs/D; verify: D, pF.

q. Press Cs/Rs three times; verify: kΩ, pF and Ω, pF.

r. Press Cp/Gp three times; verify mS, pF and μS, pF.

s. Switch the POWER OFF.

This completes the verification that your Digibridge meets or exceeds the minimum performance standards delineated in the specifications.

5.6 DISASSEMBLY AND ACCESS.

WARNING

If dissassembly or servicing is necessary, it should be performed only by qualified personnel familiar with the electrical shock hazards inherent to the high-voltage circuits inside the cabinet. Service personnel, observe the handling precautions given at the front of this section, page 5-1.

5.6.1 Instrument Disassembly. Figures 5-1 through 5-6.

Use the following procedure for access to replaceable parts and contact points used in trouble analysis.

a. Disconnect the power cord.

b. Remove the top-cover screws from the rear panel of the main chassis. See Figure 6-2. Slide the top cover forward about 6 mm so that its front corners are unhooked. Lift it directly upward (Figure 5-1). Reassembly note: 2 screws, 13 mm long.

The next step, removal of display board, is recommended (though not necessary) before removal of the main circuit board. Having the main board firmly supported is an advantage when the display board is removed or inserted.

c. Remove the 2 support screws, at left and right, that hold the display board to its brackets. (See Figure.) Pull the board directly out of its socket in the main board. Keep the display board in its original (inclined) plane until it is completely free (Figure 5-2). Reassembly note: 2 screws, 6 mm long with washers. Do NOT drop them into the instrument.

d. Remove the ribbon cable (1657-0200) from power supply (at V-J1) and main board (at MB-J5). Notice that the connectors are symmetrical and reversible; and the cable is extra long, for convenience in servicing.

The next step, removal of the power supply, is NOT related to the removal of the main board. Either can be left in place while the other is removed.

e. Remove the 4 screws that pass vertically through the 4 corners of the power supply into the main chassis. Lift the power supply slightly and move it back carefully while disengaging the POWER pushbutton extension from its hole in the front panel (Figure 5-3). Reassembly note: 4 screws, 8 mm long.

f. Remove the interface option, if you have one, after removing the 2 large screws with resilient washers in the rear panel. (If the panel held by these screws is blank, leave it in place.) Reassembly note: align board edges carefully with connector and guide that are inside of instrument, while pushing interface option into position.

g. After disconnecting the ribbon cable, provide a convenient "upsidedown" support by reinstalling the top cover, temporarily. Turn the instrument, bottom up.

h. Remove 4 screws from the bottom shell, one near each rubber foot. Lift the instruction card and its retaining pan free. Slide the bottom shell back (or forward), free of the main chassis (Figure 5-4). Reassembly notes: be sure to enfold the pliable dirt seals at left and right sides of main chassis as you start to slide bottom shell onto main chassis; use 4 screws, 9 mm long.

i. Remove 14 screws from positions shown in Figure 5-5 as A, B, and C, to free the main board. Remove the shield, which was held by screws C. Reaching through the access hole at J8 (probe cable connector), and using one hand at the rear edge of the main board, lift the front edge until J8 escapes above the chassis front lip. Lift rear edge until J7 (bias connector) touches rear lip. Rotate the board ccw, sliding J7 over the chassis right side lip until J7 escapes. See Figure 5-6. Rotate cw to restore the original angle (J7 above chassis rear lip). Move the main board toward the rear until J7 protrudes about 1 cm (3/8 in.). Lift mainboard front edge so keyboard assembly can escape. Slide the board forward and up until the display board (if still attached) is entirely free from the chassis.

Reassembly note: return washers (if any) to original positions; screws at A are 6 mm, B are 8 mm and C are 16 mm long. Be sure that hardware makes circuit contact only in those places where it did originally.

j. To remove the keyboard module, remove the 4 screws at E and carefully pull the module directly away from the main board. Reassembly note: be very careful not to bend pins when plugging the keyboard-module connectors into their main-board sockets. Reassembly note: 4 small screws with lockwashers.

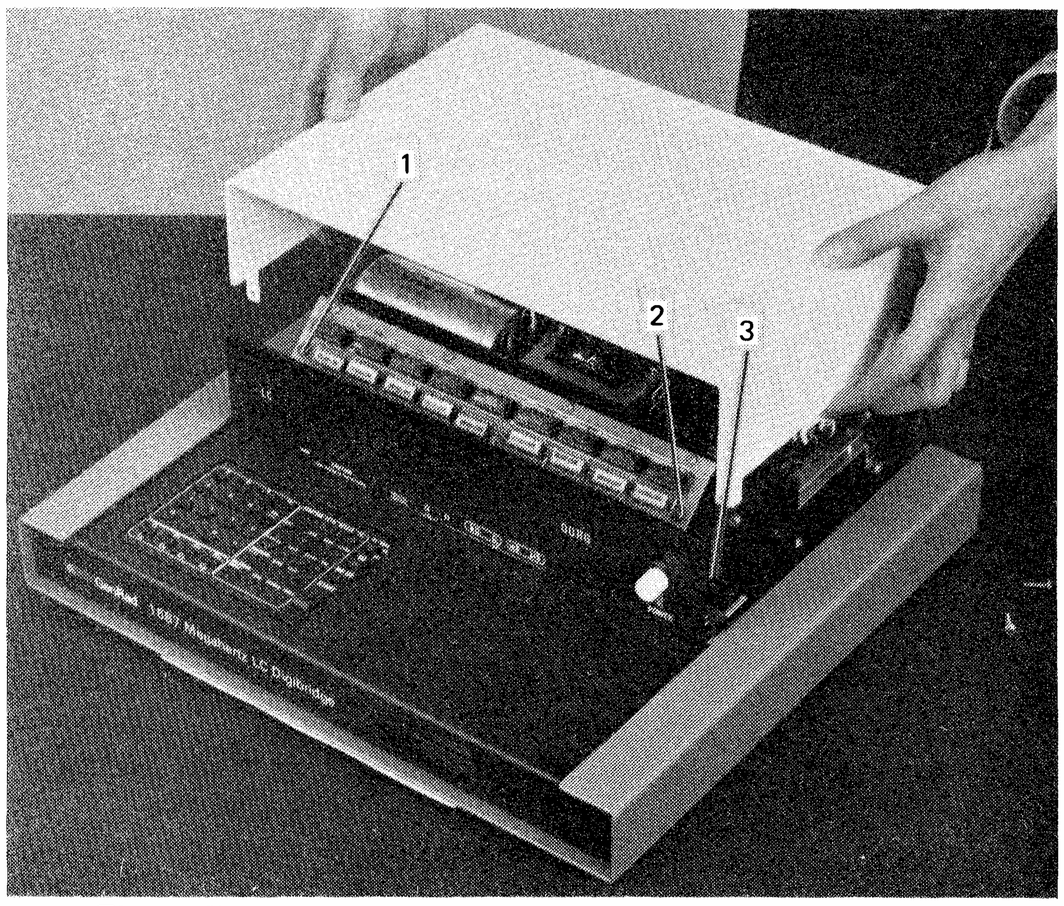

Figure 5-1. Removal of top cover. Items 1 and 3 are screws that hold the display board. Item 2 is ribbon cable 1657-0200 that connects power supply to main board.

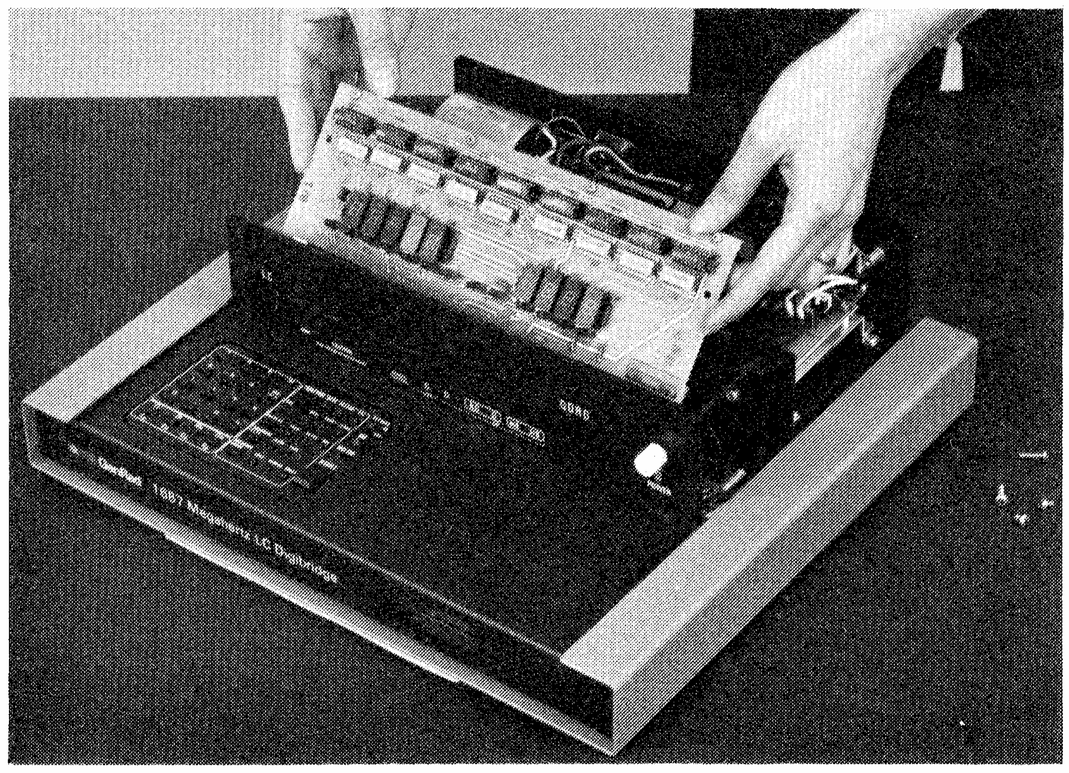

Figure 5-2. Removal of the display board.

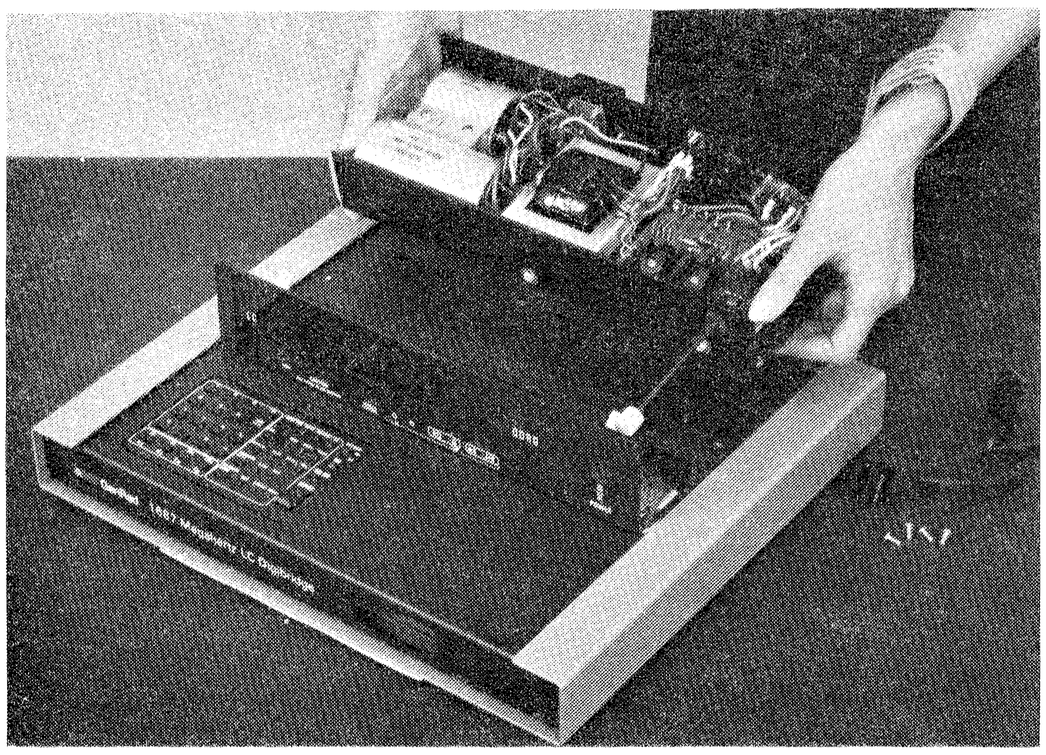

Figure 5-3. Removal of the power supply. The ribbon cable must be disconnected first. The display board can be left in place, but has been removed in this picture.

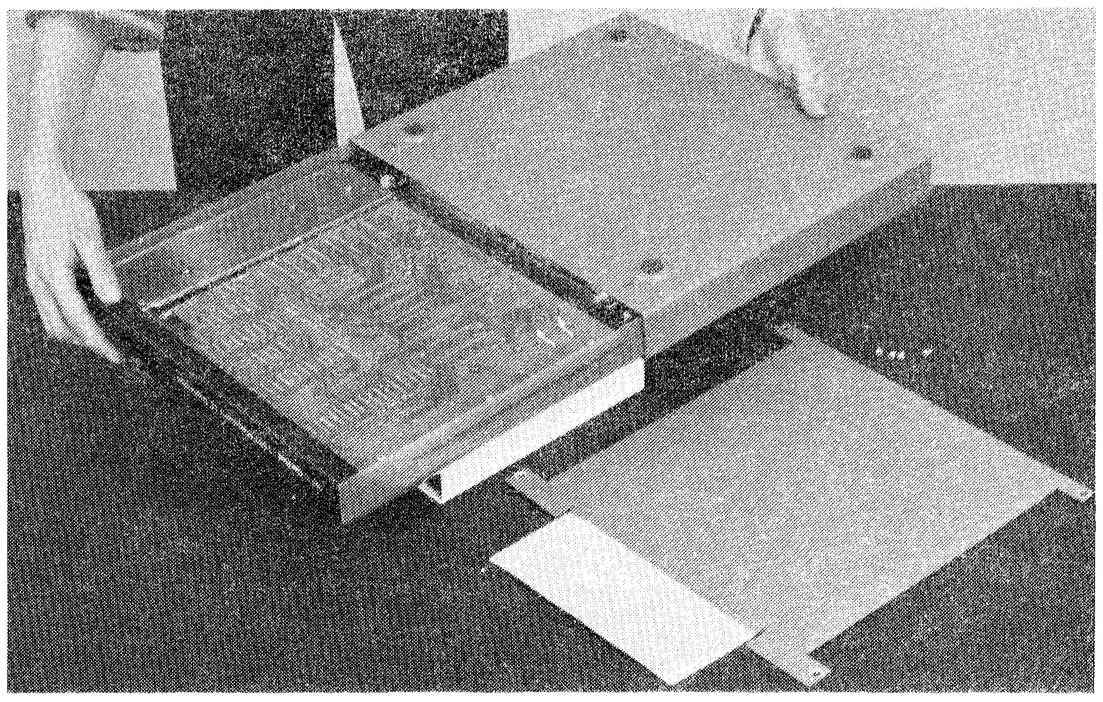

Figure 5-4. Removal of the bottom shell. The top cover has been temporarily installed as a support.

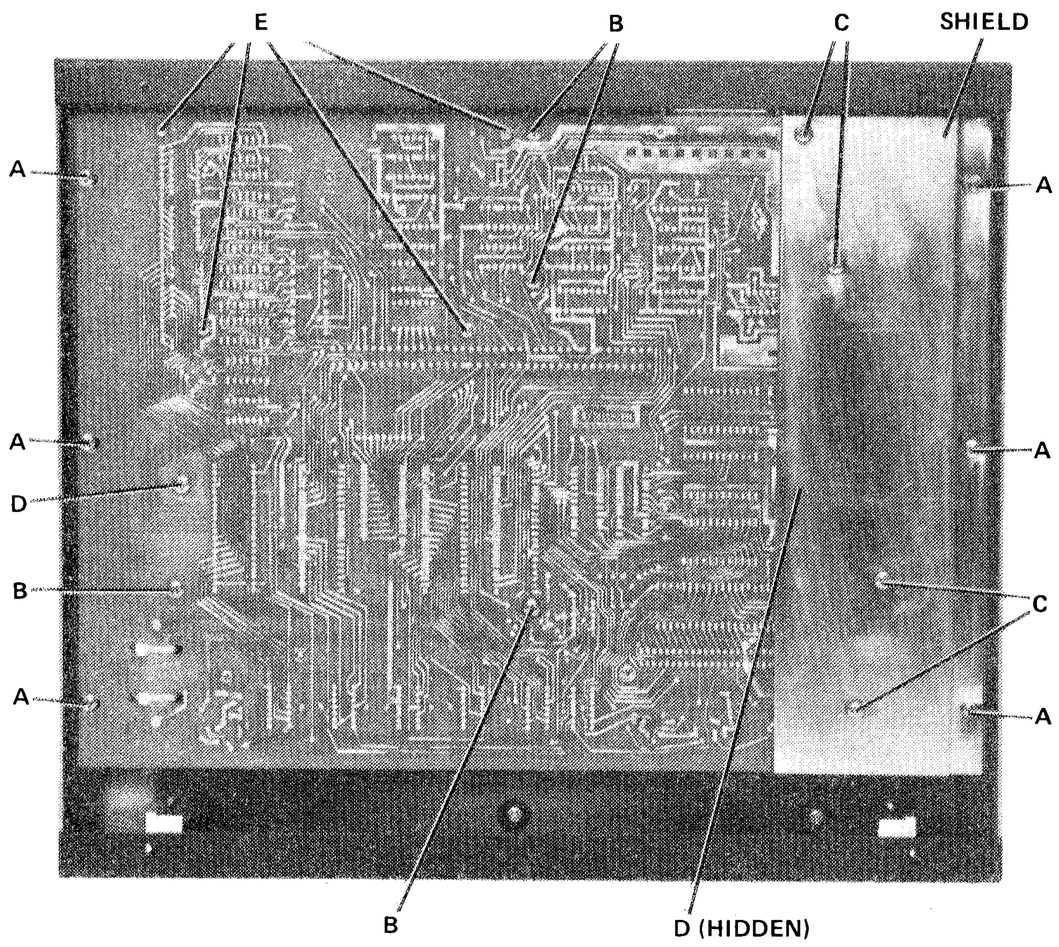

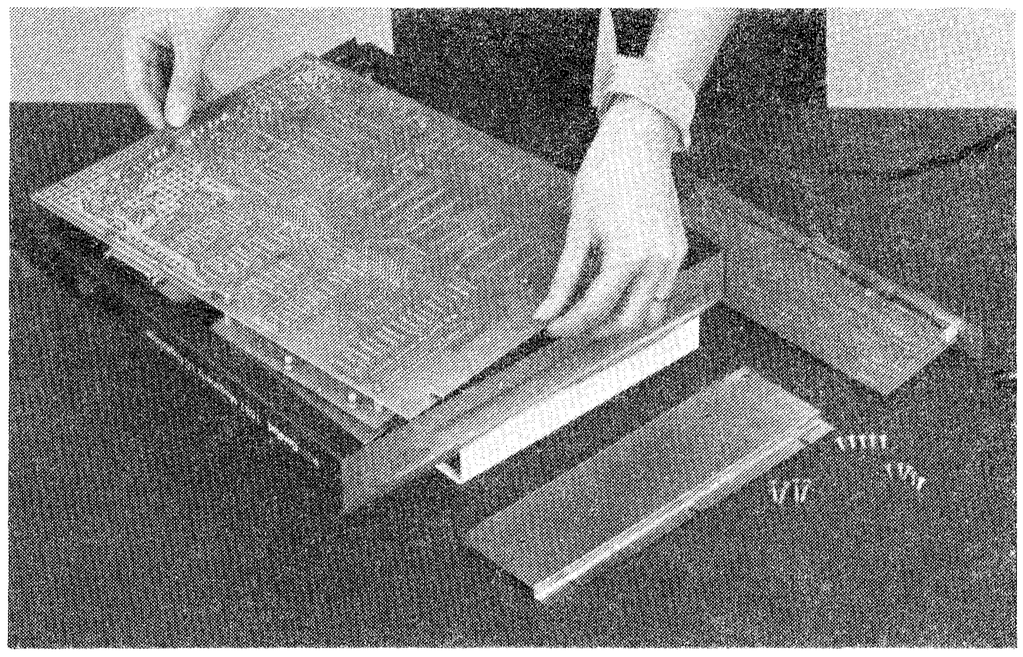

Figure 5-6. Removal of the MB board. The ribbon cable must be disconnected first. Prior removal of the display board also is highly recommended. Because the board is partially enclosed by the main chassis, some motions are necessary, as described in the text.

Figure 5-5. Locations of screws on the main board, bottom view. Screws at A, B, and C hold the board to the chassis. Screws at D hold brackets for display board; at E, the keyboard assembly.

5.6.2 Access. Figures 5-7, 5-8, 5-9.

Locations of principal interior parts and points of interest for trouble analysis are shown in the accompanying pictures.

On the main board, notice that the analog circuitry is placed along the front (forward of the display-board connector) and along the right-hand edge. Most of this board supports digital circuitry.

For a more complete guide to parts location, refer to Table 5-10. This lists the principal parts of the main board and indicates where each one is shown on the board layout and the schematic diagrams. The alphanumerics such as B4 or C6 are coordinates on the indicated figures in Section 6. The vertical coordinates are A to E (top to bottom); the horizontal coordinates are 1 to 8 (left to right).

5.6.3 Reference Designations.

Refer to Section 6 for an explanation of these designations. For example, V-T1 designates transformer number one in the power supply (V) assembly. DB-U52 is integrated circuit number 52 on the DB board, which is the display board.

5.6.4 Removal of Multiple-Pin Packages.

Use caution when removing a plug-in integrated-circuit or other multiple-pin part, not to bend pins nor stress the circuit board. Withdraw the part straight away from the board. Unless an IC is known NOT to be a type (such as MOS) that is subject to damage by static electricity, place it immediately on a conductive pad (pins in the pad) or into a conductive envelope.

Table 5-10

MAIN-BOARD PARTS LOCATIONS

Part	Layout*	Schematic**		Part	Layout*	Schematic**	
B1	A1	6-3	E7	U6	A4	6-3	A4
				U7	B4	6-6	B7
J1	C4	6-6	D5	—	—	6-3	A3
—	—	6-5	D1	U8	B6	6-3	B3
—	—	6-7	E4	U9	B2	6-3	E2
J2	A6	6-3	C1	U9	B2	6-7	A6
J3	D1	6-7	E2	U10	B3	6-6	B3
—	—	6-7	C7	—	—	6-3	E3
J4	D4	6-5	C6	U11	B3	6-6	B6
—	—	6-5	D5	—	—	6-3	E4
J5	B6	6-5	A1	U12	B4	6-3	E6
J6	E4	6-5	D2	—	—	6-5	C1
J7	A7	6-5	D1	U13	C5	6-3	E7
J8	E5	6-5	A4	U14	C5	6-3	B7
				U15	B6	6-3	B6
L2	A7	6-5	B5				
L10	D7	6-5	B3	U16	C6	6-3	B4
				U17	C6	6-3	C5
Q1	B4	6-3	B2	U18	C6	6-5	B7
Q2	A7	6-5	B6	U19	B7	6-5	B6
				U20	C2	6-5	D4
Q3	B7	6-5	B5				
Q4	B7	6-5	B5	U20	C2	6-7	B5
Q5	B7	6-5	B6	U21	C2	6-7	B5
Q6	C6	6-5	C3	U22	D2	6-7	C6
Q7	C6	6-5	C3	U23	D2	6-7	C5
				U24	D2	6-7	C4
Q8	C6	6-5	B6				
Q9	C6	6-5	B6	U25	E2	6-7	C3
Q10	E4	6-5	D2	U26	E2	6-7	C2
Q11	D7	6-5	B2	U27	E2	6-7	C1
Q12	D7	6-5	B2	U28	C3	6-6	D2
				U29	D3	6-5	E2
Q13	A2	6-3	E6				
Q14	A2	6-3	E6	U30	E3	6-5	E3
Q15	A6	6-3	A5	U31	E3	6-5	E4
Q16	A5	6-3	A6	U32	E4	6-5	E4
Q17	A5	6-3	A6	U33	D4	6-5	C7
				U34	D4	6-5	C4
R87	E6	6-5	B1				
				U34	D4	6-5	D5
T1	D7	6-5	B3	U35	E5	6-5	E5
				U36	E5	6-5	D4
U1	A2	6-7	B6	—	—	6-5	E5
				U37	D5	6-5	C7
U2	A3	6-6	C4				
U3	A3	6-6	C5	U38	D5	6-5	D5
U4	A4	6-6	C5	U39	E5	6-5	E6
U5	A4	6-6	C6	U40	D6	6-5	C5
U6	A4	6-6	C3	U41	E6	6-5	B1

*See Figure 6-4 for physical location.
**See indicated figure in Section 6 for location on schematic diagram.

DO NOT attempt to remove a soldered-in IC package unless you have the proper equipment and skills to do so without damage. If in doubt, return the board to GenRad.

5.6.5 Test Fixture. Figures 5-10, 5-11.

The 1687-9600 Test Fixture can be disassembled for cleaning or repair. Use this procedure.

a. Disconnect and remove any test-fixture adaptor and/or probe-and-cable assembly that may be attached. Turn the fixture upside down.

b. Remove the 4 screws (A) through the rubber feet. Slide the bottom shell off as shown. Reassembly note: 4 screws, 1 cm long.

c. Remove 4 screws (B) at corners of circuit board 1687-4730. Lift the board out. Reassembly note: position so that tab of shield between + and − contacts fits into slot in guide plate; start 4 screws (6 mm, with washers) but do not tighten; plug probe into position and insert 2 typical radial-lead DUTs (one in each slot, leads well separated); clamp the probe while board is positioned so that DUT leads are centered in their guide slots; tighten the 4 screws; remove DUTs and probe.

d. To remove 2 front contacts (P/N 1686-1940) for cleaning, use a hexagonal wrench (2.38 mm, 3/32 in.) to remove 2 screws (C) per contact. Reassembly note: gap between contacts should not exceed 0.24 mm (.009 in., or the thickness of 3 layers of typing paper); and contacts must press against each other (insulated by tiny dielectric spacers attached near each end of slot) so that a wire of 0.64 mm diameter (AWG 22, .025 in.) can be withdrawn from between them with a force of 1 (minimum) to 2 (maximum) newtons (100 to 200 grams). Tighten the hex-drive screws with a torque of 1.3 to 1.4 newton-meters (12 in. lb).

e. If necessary, remove the 2 remaining contacts as in the previous step. Reassembly note: align the contacts so that the surfaces that will press against the DUT leads are collinear (so that the guide plate can be positioned with its slots matching the gaps in BOTH contact pairs); tighten hex-drive screws as specified above.

5.6.6 Probe and Cable Assembly.

Do NOT attempt to disassemble the probe (except for removal of the probe nose). Return the assembly to GenRad if repair is necessary. Replacements (spares) are readily available.

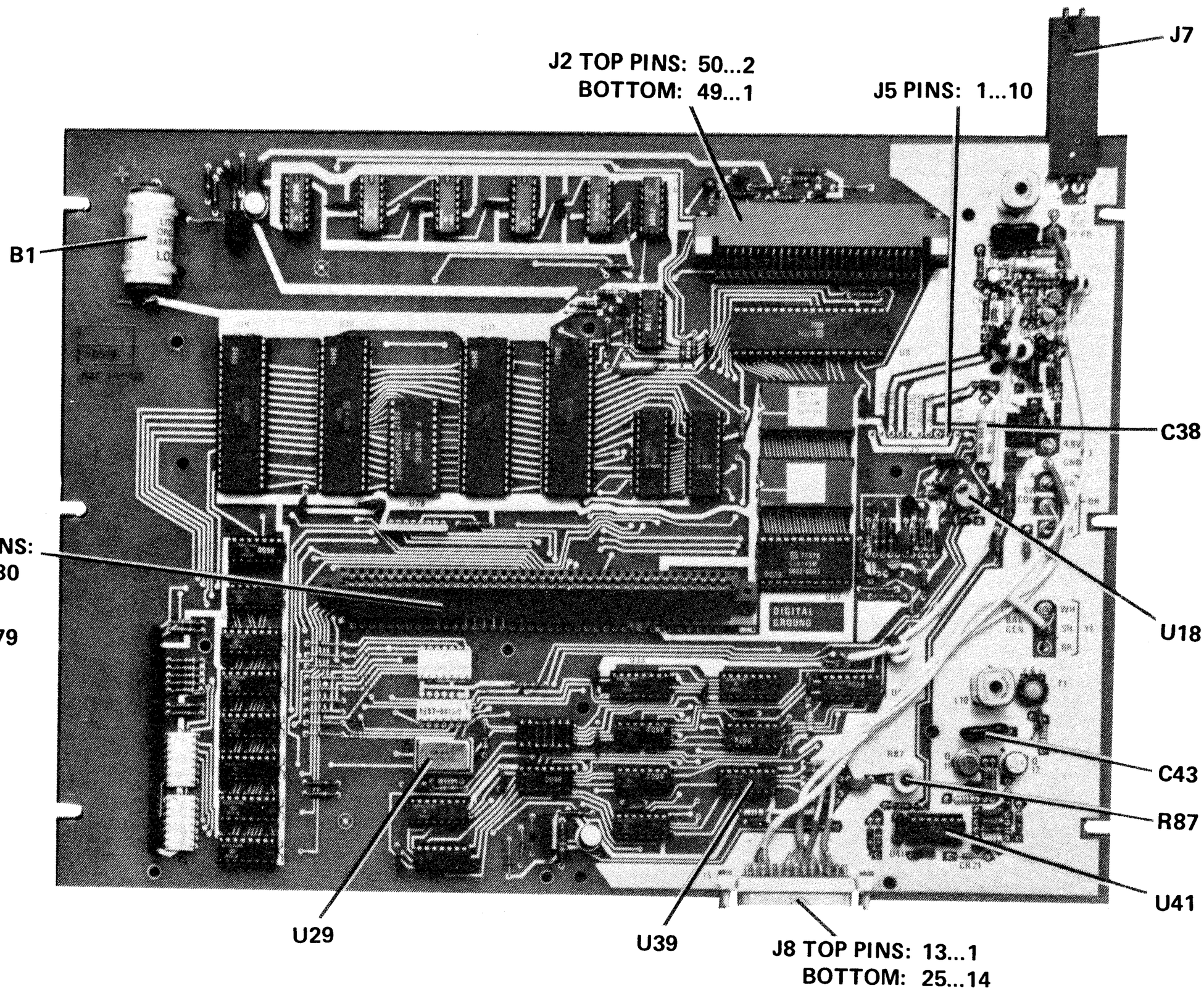

Figure 5-7. Main or MB board, top view. Important points for servicing are indicated. For more detail, refer to the accompanying table and the board layout shown in Section 6.

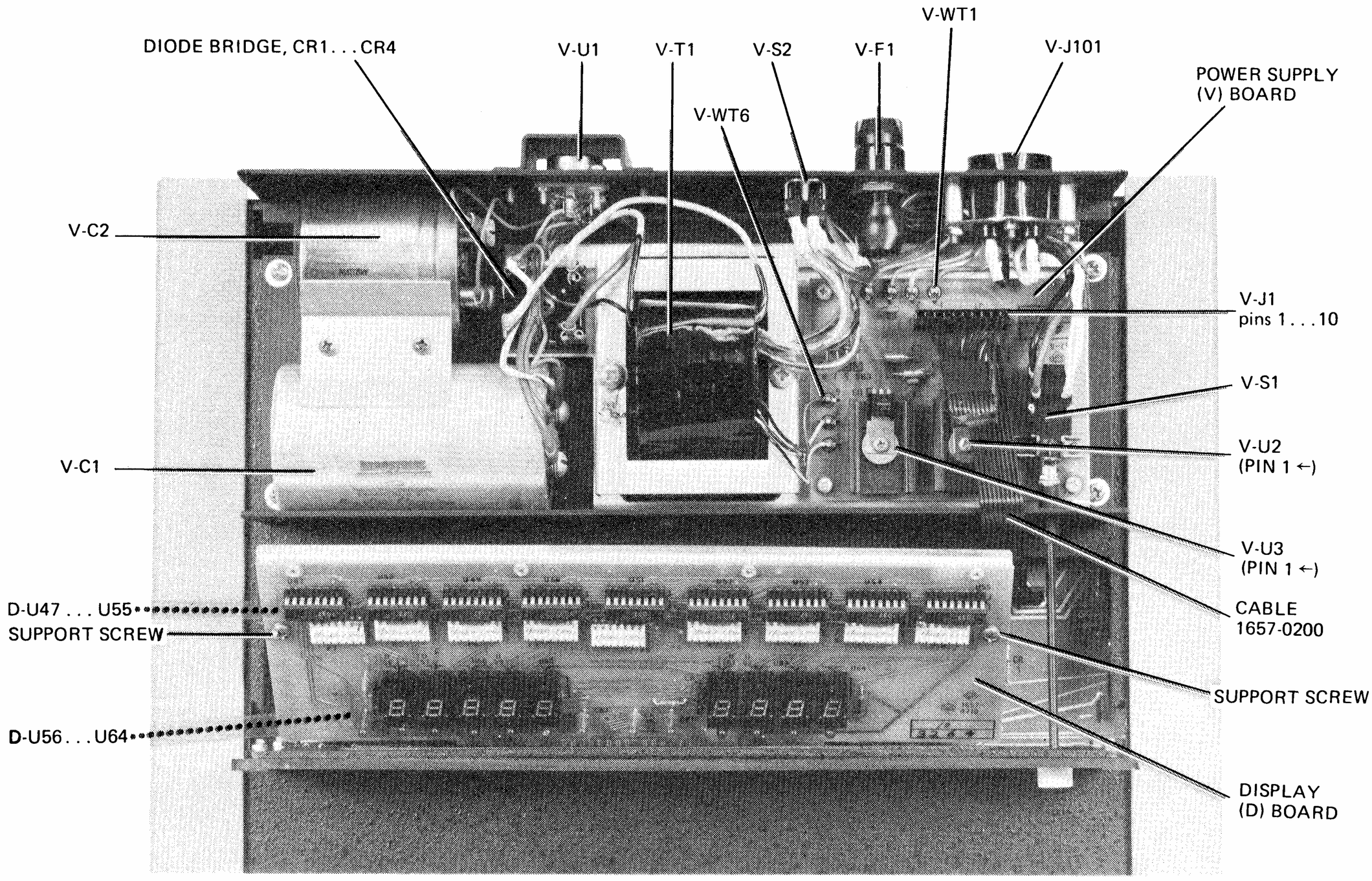

Figure 5-8. Power supply (V assembly) and display (DB) board, shown in the instrument with the top cover off.

5.7 PERIODIC MAINTENANCE.

5.7.1 Care of the Test Fixture.

About once a year (more or less depending on usage) the test fixture and its axial-lead adaptors should be inspected and cleaned as follows:

a. Clean the contact surfaces and blades of the axial-lead adaptors with isopropyl alcohol. Rub with a cotton swab (Q-tip). Remove any remaining liquid alcohol by blowing with the breath and remove any remaining cotton fibers, with tweezers.

b. Disassemble the test fixture as far as 5.6.5 step c (board removal) or, if it seems necessary, 5.6.5 step d (removal of front contacts) for access.

c. Clean and check the 4 contact strips. Use a card wet with isopropyl alcohol for cleaning. Hold the board at an angle so that any drip falls away from the circuits.

CAUTION

Do NOT scrape with a metal tool. Do NOT damage the tiny dielectric spacer (near one end of each contact surface).

For best results and minimum maintenance effort, the operator must remove any obvious dirt from leads of DUTs before inserting them into the test fixture. Its contacts will wipe through a film of wax, but they can become clogged and ineffectual if the operator is careless about cleanliness.

5.7.2 Care of the Display Panel.

Use caution when cleaning the display window, not to scratch it nor to get cleaning substances into the instrument. Use soft cloth or a ball of absorbent cotton, moistened with a mild glass cleaner, such as "Windex" (Drackett Products Co., Cincinnati, Ohio). DO NOT use a paper towel; do NOT use enough liquid to drip or run.

If it should be necessary to place marks on the window, use paper-based masking tape (NOT any kind of marking pen, which could be abrasive or react chemically with the plastic). To minimize retention of any gummy residue, remove the tape within 2 weeks.

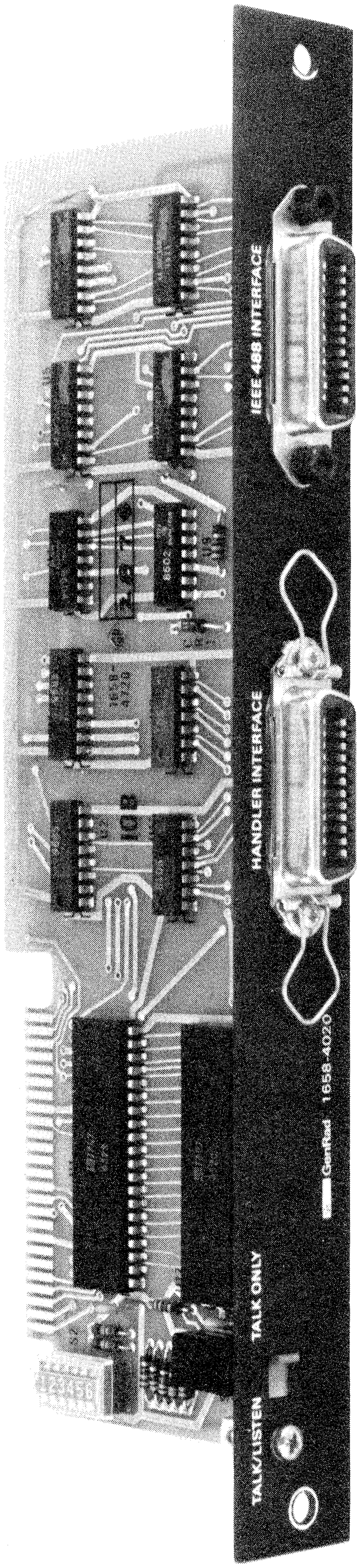

Figure 5-9. Interface option assembly 1658-4020, including the interface option board (IOB) 1658-4720.

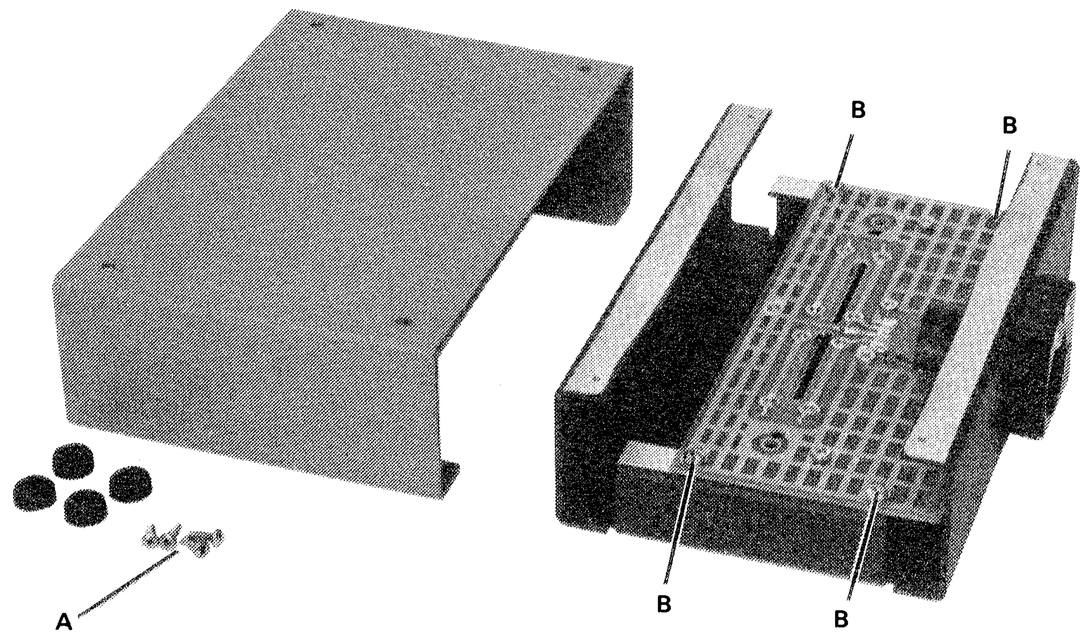

Figure 5-10. An early step in disassembling the test fixture. Screws A pass through the feet and hold the bottom shell. Screws B hold the circuit board.

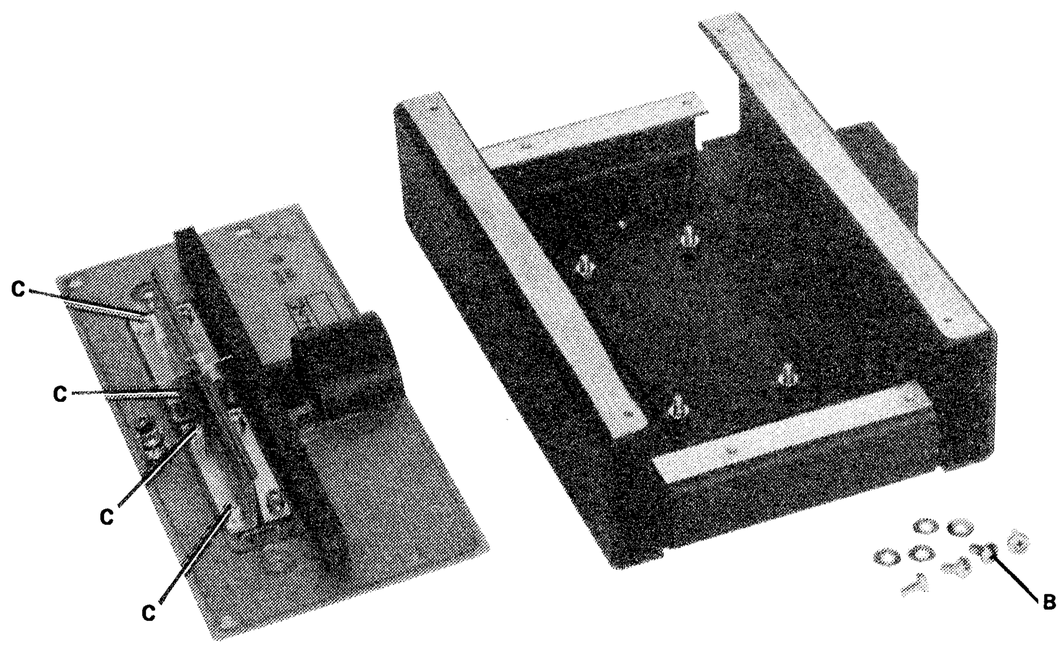

Figure 5-11. The test fixture further disassembled, showing the circuit board removed. Screws C hold 2 of the contacts and a similar set hold the other 2.

5.8 TROUBLE ANALYSIS.

5.8.1 General.

CAUTION

Only well qualified personnel should attempt trouble analysis. Be sure power is OFF during disassembly and setting up for tests. Carefully observe the HANDLING PRECAUTIONS given at the beginning of Section 5.

Resources. Refer to Section 4 for a good understanding of the theory of operation. The block diagrams and discussion there provide necessary background, which can generally save time in trouble analysis. Refer to Section 6 for hardware details: circuit layouts, schematic diagrams, and parts lists.

Abnormal digital signal levels. Most digital signal levels in this instrument are normally near zero (logic low), about +3.5 to +5 V (logic high), or rapidly switching between these states. Failure of a digital source often produces a dc voltage of about +2 V on a signal line. Use high-impedance probes in measuring. Use a scope as well as a voltmeter, because an average of 2 V may be normal for a digital signal that has a duty cycle near 50%.

Duplicated circuits and resistor networks. Some circuits, as in the display board for example, are duplicated several times. The ICs can usually be exchanged between a faulty circuit and a functional one, to identify a "bad" IC. Notice, also, that the resistor networks DB-Z2 . . . DB-Z10 are simply compact packages of 220-Ω resistors. If one resistor is open, it is not necessary to replace the entire package. Use a 5% resistor. There are also other resistor networks that can be repaired similarly.

Circuit board replacement. Refer to para 5.3 for recommended procedures to obtain replacements.

Telltale symptoms. Scan the following group of symptoms for a preliminary analysis of trouble and suggestions for more detailed procedures, if applicable.

Display. A perpetually blank digit or decimal point may be caused by a fault in the directly associated circuit on the display board. (Refer to comments above.)

Reactance Error. If L and C measurements are inaccurate, the test signal source may be at fault. In checking it, as in the following paragraph, verify that the frequency is within ±0.01% of 1.000 MHz, as specified. (See front of manual.)

Test Signal. To check performance of the test-signal source, use a scope to look at the open-circuit signal at the + terminal of the probe nose. (Be sure there is no DUT.) The signal should be an undistorted sine wave at 1 MHz, amplitude about 0.30 V pk-pk (±15%). If this is correct, skip over para 5.8.4.

Analog Front End. To check the entire analog front end, verify that the signal on the main board at the rear end of C38 (or at MB-U19 pin 6) has the characteristic sawtooth waveform illustrated in para 5.8.5, while the instrument is measuring a DUT. (The size of each individual tooth in the waveform depends on the DUT.) If this waveform is present, for all parameters (Ls/Q, Cs/D, Cs/Rs, Cp/Gp), then skip to para 5.8.7.

Access. Except for the "test signal" check described above, trouble analysis can best be done with the main board and display board assembly sitting on a nonconducting pad, and connected by its regular cable to the Digibridge power supply. The shield (see Figure 5-5) should be set aside. The power supply can also be removed from the main chassis, if desired, and set behind the main board.

Active-Low Signal Nomenclature. Occasionally we signify, in a digital signal name, that the implied function is accomplished when the signal is in the low state, i.e., that the signal is "active low." For this purpose, the hyphen and letter -L are used as a suffix. This suffix also serves to designate "inverse"; for example, if signal END is processed through a logical inverter, the result can be identified as END-L. Notice that it has been common practice to represent the active-low characteristic by a bar or line drawn above the name. If some use of the bar is found in this manual, we regret the inconsistency, please consider it equivalent to the suffix "-L."

Introduction to Detailed Analysis. The following trouble analysis procedures will serve as a guide for localizing a fault to a circuit area. In some cases, a specific component part can be isolated for replacement. In other cases, the problem can be narrowed down only to a circuit board.

Except for the short-cuts indicated above, follow the procedure strictly in the order given, doing the principal steps (a, b, c, d, . . .) until a failure is found. If so, follow the secondary steps, if any are given at the point of failure (aa, ab, ac . . .).

5.8.2 Power Supply.

Check the power supply (V assembly) if there is a massive failure (nothing works) or as a starting procedure in any thorough analysis. Refer to Figure 5-8.

NOTE

If a voltage regulator (U1, U2, or U3) must be replaced, be sure to spread silicone grease (like Dow Corning compound No. 5) on the surface toward the heat sink. For U1, coat both sides of the insulating washer.

a. Check the output voltages, using a digital voltmeter, with ground reference at V-J1 pin 9 (ribbon cable unplugged), as follows:

Pin 1 = +5 V.
Pin 3 = +5 V.
Pin 4 = −8 V.

b. Make a check similar to step a, with ribbon cable connected, ground reference at right edge of MB board, probing MB-J5 from below the board. (This checks for overload outside the power supply.)

5.8.3 Power-Up Self Checks.

Each time the 1687 Digibridge is powered up, an internal self check routing is automatically performed. Before the instrument can be operated normally, each step in the self check must pass. If any portion fails, normal operation is inhibited and a corresponding error code is displayed. The five different codes, used to indicate particular areas of failure in this instrument, are explained as follows.

11111 1111. The random-access-memory exercise failed. A read/write test is performed, in which each data bit is exercised in every RAM address. Failure of this test hangs the program.

22222 XXXX. The detector/converter half-scale (zero) test has failed. This test checks the dual-slope detector, sampling switches, zener references, phase reversal circuit, and counters. The QDRG display usually indicates zero-measurement results, which should be between 20 and 32 (decimal). Otherwise, the display indicates the magnitude of the last failure (0 to 127). Failure of this test hangs the program in an endless loop, repeating the dual-slope measurement sequence. Refer to para 5.8.5, step i for pertinent trouble analysis.

33333 XXXX. The front-end test failed. Check carefully that a probe/cable assembly is installed and that it is properly terminated. Either the probe nose or 1687-9600 Test Fixture is a proper termination. If you have a 5-wire user's cable instead (refer to Figure 3-4), there must be a low-impedance connection, 10 Ω or less, between A and B and another between C and D. This test checks the following circuitry: signal generator, power amplifiers, signal transformers, probe amplifiers, signal switches, probe connec-

aa. If Trouble is found at step a, check "+5 V" circuit:

- *At outputs of U1 and U2: +5 V dc (regulated).*
- *At WT1 (inputs of U1 and U2): +10.8 V dc.*
- *Across input to diode bridge (yellow-to-yellow):* 10 Vrms

ab. Check "−8 V" circuit:

- *At output of U3: −8 V dc (regulated).*
- *At input (center terminal) of U3: −13.8 V dc.*
- *Across WT7 to WT8: 11.3 V rms.*

ac. Check power-line circuit to primary of transformer T1.

tions. The QDRG display indicates the square of the ratio of actual signal to full scale. This number should be between 0.25 and 1.0. Failure of this test will hang the program in an endless loop, repeating the dual slope measurement. Refer to para 5.8.4 for pertinent trouble analysis.

44444 4444. The dual-slope converter/detector timeout has been invoked; there has been an invalid measurement. This can occur during power-up self check or during any measurement. (An all-4s display flashing alternately with measurement results will indicate an intermittent fault.) A timeout is built into the program for dual slope measurements. If the burst counter or comparator circuitry malfunctions, the program will "time-out." The unsuccessful measurement is then repeated until the result is satisfactory. A timeout will hang the program in a loop as in failure 2 or failure 3. If the 4's error code on the display is flashing with reading, the malfunctions could be marginal or intermittent. Refer to para 5.8.4 step g for pertinent trouble analysis.

55555. This LC display indicates that the calibration locations in memory are locked out. Notice that this indication is not normally a power-up fault indication; this is a status indication in normal calibration sequences. We list it here for completeness. Once the interlock sequence is entered ("=" key, followed by "NOMINAL" key) the 5's code will go out, indicating that calibration is enabled. The operator then presses START (when the standard is connected to fixture), to initiate scale calibration. Refer to Full Recalibration, para 3.4.3.

CAL. If FUNCTION is automatically set to CAL at power-up, there has been a loss or change of calibration data stored in random-access memory. A possible cause is low battery voltage. (Life expectancy of battery, at least in dry climate, is 5 to 10 years.) Refer to Table 1-3 for replacement part numbers. Replacement is a repair/service procedure; see para 5.8.8.

5.8.4 Test Signal Source.

This procedure checks the circuitry that generates the test signal. (We proceed backwards, more or less, toward the oscillator.)

a. Install the 1687-9600 Test Fixture and insert as DUT a 240-pF capacitor.

b. Select conditions as follows.

FUNCTION – MEASURE
DISPLAY – VALUE
MEASURE RATE – FAST
MEASURE MODE – CONT
Parameter – Cs/D.

c. Using a scope, check signals at "1 MHz BAL GEN," each terminal versus ground. Probe the white- and black-wire terminals of yellow-banded interior cable, slightly rear from T1 and L10, near right edge of board. Verify: sine wave, 5.5 V pk-pk, 0 V dc, 1 MHz, each terminal. If all right, check also at J8, pins 11, 24, with probe cable unplugged; then reconnect cable.

NOTE

If step c is verified, skip to para 5.8.5. The prefix MB- is understood, below. Unless otherwise stated, connect scope-probe ground clip to ground on main board, such as the frame of J8.

d. Check signals at each end of C43 versus ground. (C43 is just forward of L10.) Verify: sine wave, 20 to 24 V pk-pk (20.6 V ideal), 1 MHz, each end.

da. Additional information: dc level 5 V. If signal is all right here but missing in step c, defect is probably in T1.

e. Check signals at either end of R84 and either end of R86. Both are near front corner of board, forward of Q12, pointing toward Q12. (If you are probing bottom of board, find signals at bases of Q11 and Q12.) Verify: slightly irregular sine wave, 1 to 1.2 V pk-pk, 1 MHz, each.

ea. Additional information: dc level −7.5 V. If signal is present at R86 (nearest corner of board), but missing or weak at right-hand lead of C43, Q12 is not functioning. Check for −8 V dc at emitter (pin at left); if all right, replace Q12. Similarly, if signal is all right at R84 but not at left of C43, and if −8 V dc is found at Q11 emitter (pin at right), replace Q11.

f. Check signal at input to U41, pin 14. (Pin 1 is at left front.) Verify: slightly irregular sine wave, 130 to 160 mV pk-pk, 1 MHz.

fa. Additional information: dc level −1.5 V. If U41 input is all right, but step e discrepant, check at U41, pins 7 and 8 for slightly irregular sine wave, 1 to 1.2 V pk-pk, approximately 1.6 V dc, 1 MHz, each. If either is faulty, replace U41.

g. Connect a counter to vertical-channel output of the scope for use in the remainder of para 5.8.4. Use a low-capacitance scope probe, to avoid loading down the circuit being checked.

h. Check signal at C8, left end. C8 is just left of trim pot R87. Verify: slightly irregular sine wave, 250 mV pk-pk, 1.3 V dc, frequency 1.0000 MHz ±.0001 MHz. If signal is missing, check frequency in any step below, i through l, (at point closer to oscillator), to ±.01%.

i. Check input signals to U39. (Pin 1 is at right rear.) Verify: at pin 3, pulses, 3.5 V pk-pk (low 0.1 V, high 3.6 V), 2 pulses unevenly spaced in 1-μs period, counter reading 2 MHz. Verify: at pin 6, similar. Verify: at pin 11, pulses, 3.5 V pk-pk, similar to above except single pulse with cleft in middle, frequency 1 MHz. Verify: at pin 9, square wave with some fine structure at top and bottom, about 3.7 V pk-pk, frequency 8 MHz.

ia. Additional information: "low" level is 0 V dc. If step i is all right but signal is faulty at C8, check output signals from U39. Verify: at pin 2, 4 V pk-pk, counter reading 2 MHz, (high 4.5 V, low 0.4 V, 2 positive pulses 0.38 μs apart in 1-μs period, each pulse 0.12 μs wide, some ringing at low level). Verify at pin 7, similar waveform. Verify: at pin 10, 4 V pk-pk (positive pulse about 0.3 μs wide), frequency 1 MHz. Otherwise, probably fault is in U39.

j. Switch POWER OFF. Remove the keyboard module as described in para 5.6.1. Switch POWER ON. (The Digibridge measure rate will now be SLOW instead of FAST; but the following few steps can be done with either rate.)

k. Check output signals from U30. (Pin 1 is at right rear.) Verify all to be digital, approximately 4 V pk-pk, frequencies as follows: pin 11, 1 MHz; pin 12, 2 MHz; pin 13, 4 MHz; pin 14, 8 MHz.

ka. Additional information: low level is 0.4 V dc. If U30 outputs are all right but U39 inputs are faulty, check through logic gates U31, U32, U35, and inverters U36.

l. Check oscillator output U29 pin 8 (also available at option-board connector J2 pin 27). Verify: 4 V pk-pk, square wave (sinusoidal shape will appear if limited by scope frequency response), low level approximately 0.4 V, frequency 16.000 MHz ±.0016 MHz.

la. Additional information: low level 0.4 V dc. If U29 output is deficient, replace U29.

Factory Adjustments. The purpose of 2 obvious adjustments is given for reference.

L10 is set to maximize the signal through T1, with probe/cable installed (as indicated in step c, above).

R87 is set to make the test-signal level correct (measured indirectly in step c above).

5.8.5 Analog Front End.

This procedure checks the detector and associated analog circuitry that process the analog measurement signals from the probe, to the point of conversion into digital form. The operating conditions are given above. Continue, after step c of para 5.8.4, as follows. (Notice that the keyboard assembly should be in place; and verify that the MEASURE RATE is FAST.)

a. Check signal SWX, found at the black-wire terminal of the orange-banded cable. (See center of right edge of board; use 20 ms/div sweep on scope. Verify: digital signal, 3 V pk-pk (2.8 to 3.4 V pk-pk).

aa. Additional information: low level is −2.2 V dc. If SWX is missing, check X-L at U12 pin 2. (Pin 1 is at left rear.) Verify: irregular slow digital signal, 5 V pk-pk. If this is all right, replace Q6; if not, fault is in the "PIA" U12 or circuitry "behind" it.

b. Check signal SWS, found at the adjacent white-wire terminal. Verify: similar to SWX except for timing. (Timing is not important in this procedure; but timing diagrams are given below.)

ba. If SWS is missing, check S-L at U12 pin 3. Verify: irregular, slow digital signal, 5 V pk-pk. If this is all right, replace Q7; if not, fault is in U12, or "behind" it.

c. Check voltage at wire tie labeled "4.9 V" and/or at J8 pin 5. Verify: 4.9 to 5.1 V dc.

d. Be sure that the probe/cable assembly you are using is labeled "0.1 V." This is P/N 1687-9603.

Check the signal on "+" end of DUT in test fixture. Be sure that scope probe ground is on frame of test fixture. Verify: 1-MHz sine wave, with superimposed very fine structure of about 10 mV pk-pk; the sine level jumps between 160 mV pk-pk (between measurements) and 225 mV (during measurement), 0 V dc. (If you want to verify which is which, use SINGLE MEASUREMENT MODE and START.) These levels depend on value of DUT.

ea. If checks are verified up through step c, but both d and e fail, fault is in J8 or probe/cable circuit. Check connections and trace signals where possible. Swap the probe/cable if a spare is available. Do NOT disassemble the probe; replace it or return it to GenRad for repair.

If only step d fails, trouble is in test fixture. It can be serviced. If only step e fails, trouble is in probe nose; replace it.

e. Remove probe from test fixture and install probe nose. Check signal on "+" probe tip (scope probe ground on Digibridge ground) while DUT is 240-pF capacitor. Verify: signal similar to step d above.

Return to previous setup (DUT in fixture).

fa. Additional information: if the 1-MHz sine wave is examined, it shows superimposed "noise" of about 10 to 20 mV pk-pk. If step f is the first one in this procedure to fail, fault is probably in probe/cable assembly; replace it.

f. Check signal DET SIG at wire tie H of brown-banded cable (near right rear corner of board) and/or J8 pin 3. Verify: high-frequency signal jumping at a low rate between distinct levels (45 mV pk-pk, 70 mV pk-pk). Use 20 ms/div sweep rate to see envelope.

ga. Notes: Burst duration is 8.3 ms for FAST, 16.8 ms for SLOW; intervals between bursts are variable; number of bursts per measurement is 6 for FAST, 8 for SLOW; signal within each burst is 1-MHz square wave. If BST is missing, check the signals that generate it, at U40 pins 2 and 3. Verify: digital signal, amplitude irregular but approximately 3.5 to 4 V pk-pk, pulse rate 1-MHz interrupted irregularly. Also check U40 pin 1 for continuous 8-MHz square wave (also described for U39 pin 9 in previous paragraph).

g. Check "burst" signal BST at U40 pins 5 and 6. (Pin 1 is at right rear.) Verify: irregular digital signal, 4.7 V pk-pk (low level 0.4 V dc).

h. Check signal MSR at U36 pin 6 and/or gate of U2. (Pin 1 of U36 is at right rear.) Verify: digital signal, 5 V pk-pk, easily seen with scope sweep of 20 ms/div.

ha. Note: low level is 0.2 V. If MSR is faulty, check back through U36 and U20 gates to U12. See also the check on ENDSAMPLE, below. (Para 5.8.6, step d.)

i. Check signal ahead of dual slope detector at rear end of R48 (at right of Q4) and/or Q3 drain (right front pin) and Q4 drain (right rear pin); and check at U19 pin 2 and/or Q2 drain (right rear pin) and Q5 drain (right pin). Verify: small-scale digital signal that looks similar to BST but only approximately 10 to 20 mV pk-pk.

ia. Otherwise, isolate trouble to a particular transistor or other part in this circuit.

j. Check OVFLOWS signal at U33 pin 11. (Pin 1 is at right rear.) Verify: irregular digital signal, 5 V pk-pk.

ja. Note: low level of OVFLOWS signal is 0.3 V; fine structure within each burst is square wave with period of 260 µs. If OVFLOWS is faulty, check for presence of BST signal (see above) at U33 pin 2 and U37 pin 2; verify: 5 V pk-pk, low level 0.5 V dc; if present, fault is in counter U37 or U33.

k. Check signal at gate of Q5 (pin toward rear). Use scope sweep of 20 ms/div. Verify: 8 V pk-pk, irregular digital signal.

ka. Additional information: rectangular waveform, irregular, high level 0 V dc. If necessary, trace back through Q8, Q9, U40, At Q8 base (pin at right), 0.5 V pk-pk, low level about −8.3 V dc. At Q9 emitter (pin at right), 0.2 V pk-pk, low level about 0.5 V dc. At U40 pin 9 (pin 1 is at right rear), 2.5 V pk-pk, low level 0.5 V dc.

l. Check signal at heart of dual-slope-integration detector, at U19 pin 6 or rear end of C38 (at left of U19). Verify: characteristic irregular sawtooth waveform as shown in Figure 5-12.

la. Notes: The heights of the individual "teeth" depend on the impedance of the DUT. If MEASURE RATE is SLOW instead of FAST, there are 8 "teeth" instead of 6 per measurement. If this waveform is missing, fault is in U19 or associated circuit.

m. Check comparator output at U18 pin 7 (pin 1 is at right) and/or U34 pin 5 (pin 1 is at right rear). Notice that this pulse is difficult to see because of its very short duty cycle. With a vertical scale of 1 V/div and horizontal scale of 50 µs/div., with very high intensity, a fast scope can be triggered to show a faint spike above a very heavy base line.

ma. Notes: With 1 µs/div, it appears that the width of CMP pulse is variable, from perhaps 0.1 µs to 2 µs, and height about 1 V. (This short pulse occurs only once for every "tooth," maybe 30 times per second.) If you are sure that this pulse is missing, replace U18.

If a nonfunctional Digibridge has no fault in the analog circuitry (all the preceding checks are passed or, if not, they do not lead to the fault), then the fault is probably in the digital control circuitry. Proceed to the next numbered paragraph.

Factory Adjustment. The purpose of L2 is given for reference. L2 is set to resonance with C59, i.e., to maximize the signal level across itself. However, because a scope probe at L2 can affect tuning, resonance is better monitored at U19 pin 6 or at Q3.

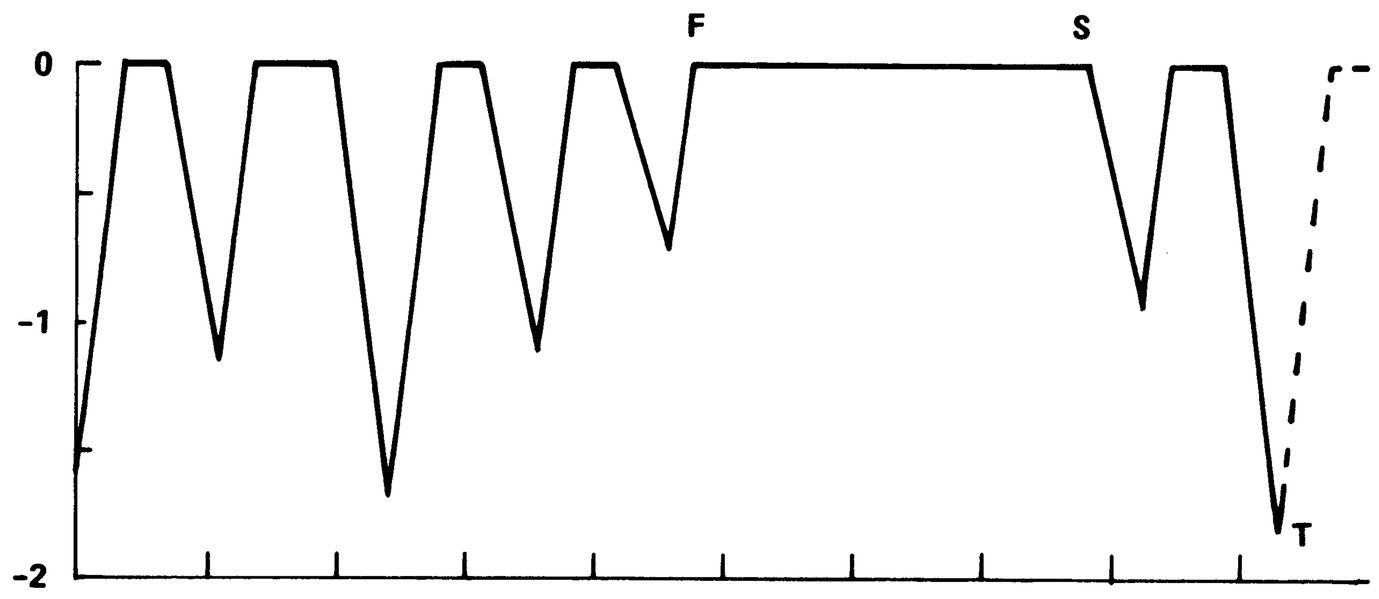

Figure 5-12. Characteristic irregular sawtooth waveform at heart of dual-slope-integration detector. Vertical scale: 0.5 V/div. Horizontal scale: 20 ms/div. Measurement rate: FAST. Device under test: capacitor, 240 pF, D = 0.003. Measurement starts at S and finishes as soon after F as required for data to be processed. Scope triggering on largest "tooth" (at T) causes F to appear near middle of screen, for this particular DUT.

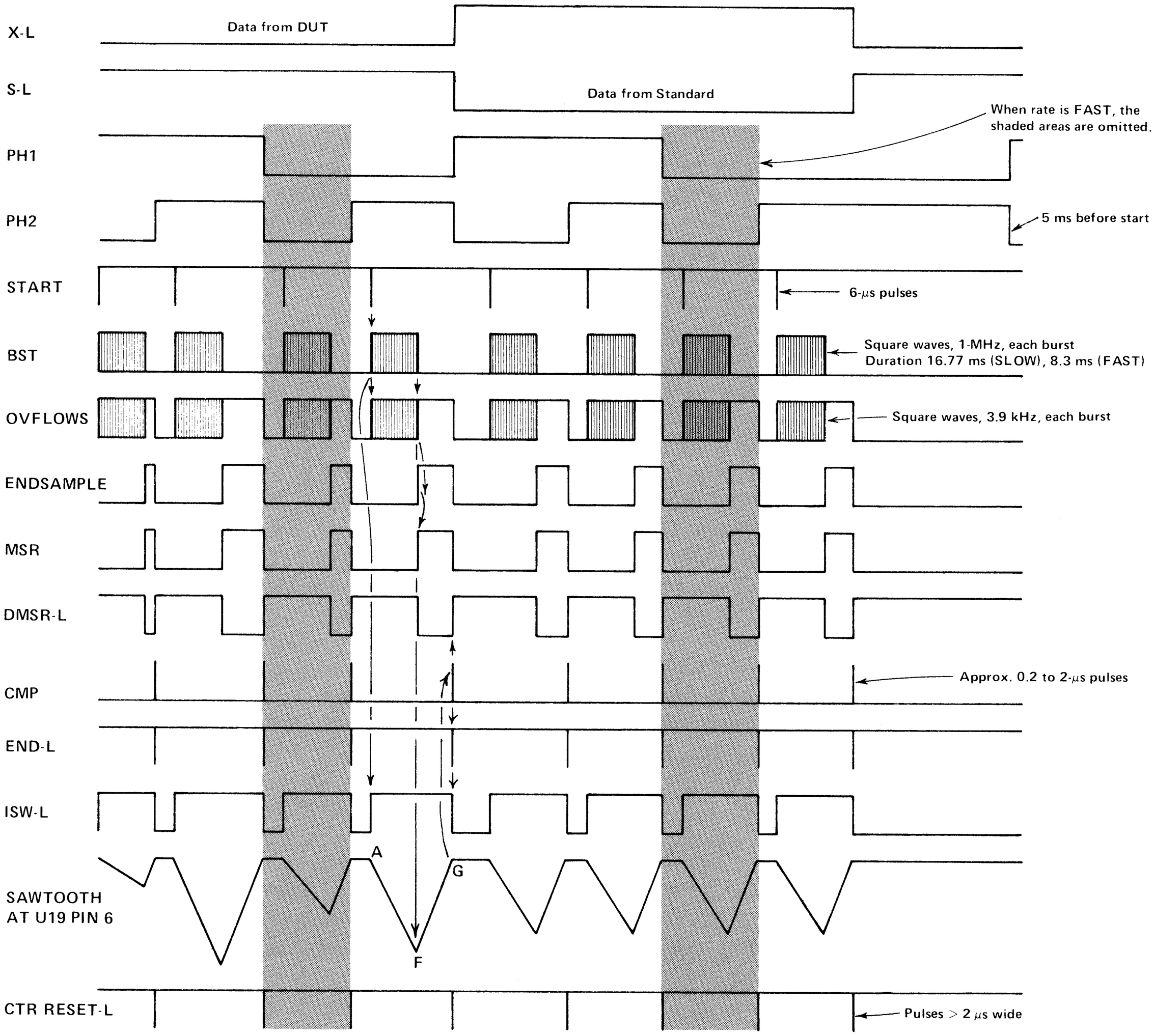

Figure 5-13. Timing diagram; one complete measurement cycle; SLOW. If measurement rate is FAST, the shaded areas are omitted (reducing the number of BST bursts from 8 to 6, and the number of "teeth" in the sawtooth from 8 to 6).

5.8.6 Control Signal Checks. Figures 5-13, 5-14.

If the analog circuitry, as checked above, fails to produce the specified signals — in particular, if the irregular sawtooth signal in the detector is missing — the fault could be in the digital circuitry that controls analog functions. (Some of the preceding analysis does trace back to digital control signals, such as SWS, SWX, BST, MSR, and the components of the test signal.) The following systematic examination of control signals may isolate a fault that was not located by the above analysis.

Examine each control signal, as listed below and compare it with the timing diagram. If any is abnormal, trace back to its source, with the help of schematic and layout diagrams. Check for poor connections or other interface problems; check simple devices (gates, flip-flops, transistors, etc.), if any are involved.

a. Examine test-signal-phase control signals:

   PH1 at U36 pin 3. (Pin 1 is at right rear.)
   PH2 at U31 pin 10. (Probe bottom of board.)

b. Examine dual-slope detector control signals:

   BST at U40 pin 5. (Pin 1 is at right rear.)
   BST-L at U40 pin 6.
   MSR at U36 pin 6. (Pin 1 is at right rear.)

c. Examine feedback signals:*

   CMP at U34 pin 5. (Pin 1 is at right rear.)
   OVFLOWS at U12 pin 9. (Pin 1 is at left rear.)
   DMSR-L at U6 pin 9. (Pin 1 is at right front.)

d. Examine other digital control signals:

   START at U38 pin 3. (Pin 1 is at right rear.)
   F (clock) at U36 pin 1 (right rear).
   8F-L (clock) at U40 pin 1 (right rear).
   ENDSAMPLE at U20 pin 1 (right rear).**
   ISW-L at U40 pin 9. (Pin 1 is at right rear.)
   ISW at Q5 gate (pin at rear.)

This last, ISW, is the converse of ISW-L. ISW is nominally 8 V pk-pk, high at 0 V dc. ISW must go to low state to permit integrator U19 (with capacitor C38) to function at all, i.e., to generate a "sawtooth."

If the digital control signals are all present and valid as far as can be seen with a scope, the digital control circuitry is functional; then the fault is probably in the integrator U19 or associated circuitry, or perhaps in the probe/cable assembly or test fixture, or in the display board.

*These feedback signals depend on an output from dual-slope comparator U18, and hence on the sawtooth from U19.
**ENDSAMPLE is derived from OVFLOWS, with delays determined by the microprocessor.

On the other hand, if a control signal is faulty, and the fault cannot be located in easily repairable circuits — specifically, if the fault is traced back to an apparent source in one of the PIAs (U9, U10, U11, U12) — refer to para 5.8.7 below.

5.8.7 Digital Circuitry.

Display Board. A faulty integrated-circuit package can usually be identified by interchanging plug-in component parts of the same type between display channels. Notice that a resistor network need NOT be replaced as a unit; use ordinary resistors. (See para 5.8.1.)

Recommended Procedure. If careful analysis of a faulty instrument, using the preceding information, indicates that the trouble is in the digital circuitry (whether in control, computation, or display decoding), further analysis is beyond the scope of this manual. Return the faulty board (the MB board, if the fault is digital, and not in the display board) or return the instrument for service. Refer to para 5.2 and 5.3.

Special Testing. Because of the very high speed and considerable complexity of the digital circuitry in the MB Board and IOB (Interface Board), it is impossible to analyze trouble there with ordinary test equipment. GenRad production and in-factory service departments make use of fast, versatile automatic test systems (GenRad products). Their efficiency and accuracy are important factors in our recommendation that digital circuit problems be solved by exchanging boards.

5.8.8 Battery Replacement.

If, at power-up, FUNCTION is automatically set to CAL, you probably should replace battery B1. (See power-up self check in para 3.4 and above in 5.8; see part description in Table 1-3.) The procedure is as follows.

a. Remove the main board.

b. Find B1 at left rear corner. Cut its straps. Observe correct polarity, for replacement.

c. Unsolder and remove old battery with care not to overheat.

d. Install the replacement and secure with straps (like the originals) or lacing cord, to safeguard terminals from strain.

e. Solder the terminals, with care not to overheat.

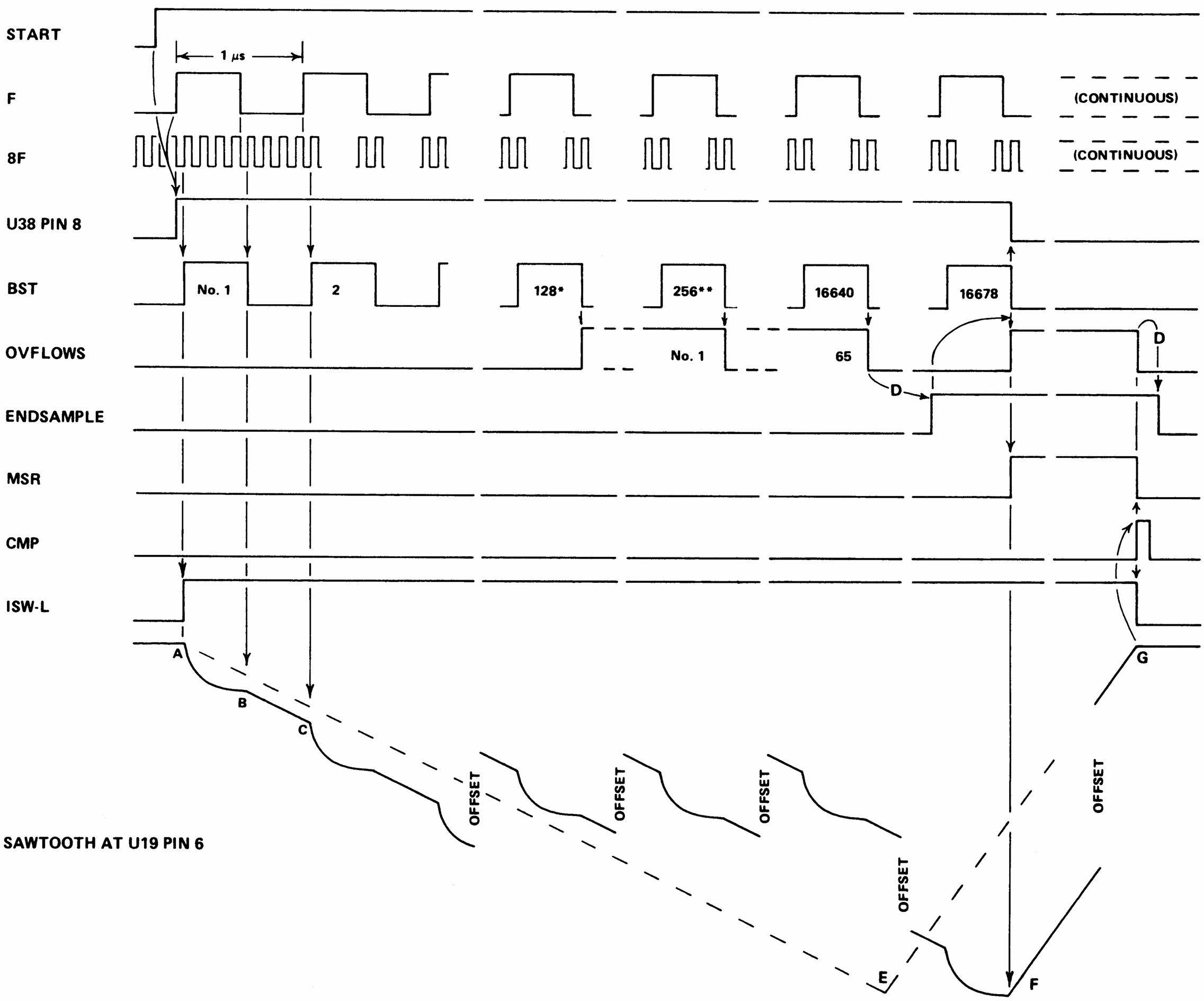

Figure 5-14. Timing diagram; one single "SLOW" sawtooth cycle. A half cycle of the analog signal is integrated while BST is logic high (AB). The other half cycle (BC) of the analog signal is omitted from the integration, which follows the slope (AE) that represents zero analog voltage. Integration continues for 16768 samples, to F. Then the voltage at F is converted into a digital number as follows. Slope FG is a constant; so time interval FG is counted, and the count represents the voltage. *OVFLOWS goes logic high at ends of samples 128, 384, . . . 16768; that is, at (2N + 1) 128, where N = 0 . . . 65. **OVFLOWS goes low at ends of samples 256, 512, . . . 16640, i.e., (2N) 128, where N = 1 , , , 65. D represents delays controlled by the microprocessor, determining particular timing of ENDSAMPLE.

Parts Lists and Diagrams—Section 6

6.1 GENERAL 6-1
6.2 REFERENCE DESIGNATIONS 6-1
6.3 DIAGRAMS 6-1
Figure 6-1. Front view, mechanical parts 6-2
Figure 6-2. Rear view, mechanical parts 6-2
Federal Manufacturers Code 6-4
Figure 6-3. Main (MB) Board, 1687-4700 digital control center diagram 6-5
Figure 6-4. Main (MB) Board, 1687-4700, layout 6-6
Figure 6-5. Main (MB) Board, -4700, analog circuit diagram 6-7
Figure 6-6. (MB) Board, -4700, measurement counter, display driver diagram . . . 6-9
Figure 6-7. (MB) Board, -4700, keyboard and display LED interface diagram . . . 6-11
Figure 6-8. Display (DB) Board, 1658-4715, layout 6-12
Figure 6-9. Display (DB) Board, 1658-4715, diagram 6-13
Figure 6-10. Keyboard Module, 1687-4200, assembly 6-14
Figure 6-12. Keyboard (KB) Board, -4710, diagram 6-15
Figure 6-13. Interface Option (IOB) Board, 1658-4720, layout 6-16
Figure 6-14. Interface Option (IOB) Board, 1658-4720, diagram 6-17
Figure 6-15. Power Supply (V) Board, 1657-4720, layout 6-19
Figure 6-16. Power Supply (V) Assembly, 1658-4000, diagram 6-19
Figure 6-17. Test Fixture, 1687-9600, diagram 6-20
Figure 6-18. High-level probe (1 V) diagram 6-21
Figure 6-19. Standard probe (0.1 V) diagram 6-21

6.1 GENERAL.

This section contains the parts lists, circuit-board layout drawings and schematic diagrams for the instrument. (Section 4 contains functional block diagrams. Section 5 contains photographs of the instrument, identifying various parts.) The heavy lines on schematic diagrams denote the major signal flow.

Reference designation usage is described below.

6.2 REFERENCE DESIGNATIONS.

Each electrical component part on an assembly is identified on equipment and drawings by means of a reference designator comprised of numbers and letters. Component types on an assembly are numbered sequentially, the numbers being preceeded by a letter designation that identifies the component (R for resistor, C for capacitor, etc.). Some of the less obvious designators are: DS, lamp; Q, transistor; U, integrated circuit; WT, wire tie point; X, J, P, or SO, connector; Y, crystal resonator; Z, network.

Each assembly (typically a circuit board) has its own sequence of designators which can be identified by using prefixes, such as A- for the main frame and V- for power supply. Examples: B-R8 designates B board, resistor 8; D-WT2 = D board, wire-tie point 2; CR6 on the V schematic is a shortened form of designator V-CR6 = V board, diode 6. The instrument may contain A-R1, B-R1, C-R1, and D-R1.

6.3 DIAGRAMS.

Generally, each schematic diagram is located on a right-hand fold-out page for convenience. The associated layout drawing and parts list are located on the same page, the facing page, or otherwise nearby.

Figure 6-1. Front view, showing replaceable mechanical parts.

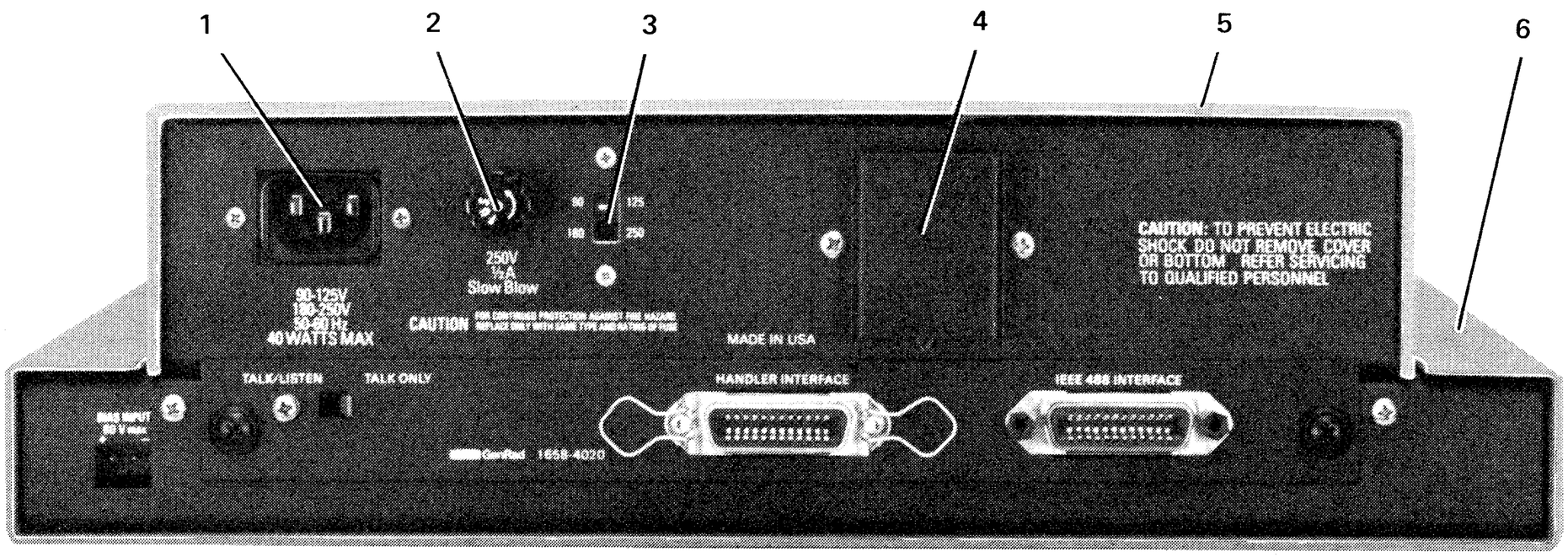

Figure 6-2. Rear view, showing replaceable mechanical parts.

6-2 PARTS & DIAGRAMS

FRONT

Figure 6-1	Quantity	Description	GenRad Part No.	FMC	Mfgr Part No.
1	4	Foot	5260-2051	24655	5260-2051
2	1	Display panel (plastic)	1687-7000	24655	1687-7000
3	1	Actuator (push rod)	1657-2810	24655	1657-2810
4	1	Card pan	1658-8200	24655	1658-8200
5	1	Instruction card	1687-0110	24655	1687-0110
6	1	Keyboard plate (120 Hz)	1687-8045	24655	1687-8045

REAR

Figure 6-2	Quantity	Description	GenRad Part No.	FMC	Mfgr Part No.
1	1	Power connector J101	4240-0250	82389	EAC-302
2	1	Fuse extractor post F1	5650-0100	75915	342-004
3	1	Slide switch S2	7910-0832	82389	11A-1266
4	1	Cover (safety)	1657-8120	24655	1657-8120
5	1	Top cover	1657-8060	24655	1657-8060
6	1	Bottom shell	1657-8000	24655	1657-8000

FEDERAL SUPPLY CODE
FOR MANUFACTURERS

From Defense Logistics Agency Microfiche

H4-2 SB 708-42 GSA-FSS H4-2

Ref FMC Column in Parts Lists

Code	Manufacturer
00136	McCoy Elctrns .Mt.Holly Springs.PA 17065
00192	Jones Mfg.,Chicago,IL 60181
00194	Walsco Elctrns.,Los Angeles,CA 90018
00327	Welwyn Intntl.,Westlake,OH 44145
00434	Schweber Elctrns.,Westburg,NY 11590
00656	Aerovox.,New Bedford,MA 02745
00779	AMP Inc.,Harrisburg,PA 17105
01009	Alden Products.,Brockton,MA 02413
01121	Allen Bradley.,Milwaukee,WI 53204
01255	Litton Inds.,Beverly Hills,CA 90213
01281	TRW.,Lawndale,CA 90260
01295	TI.,Dallas,TX 75222
01526	GE.,Waynesboro,VA 22980
01930	Amerock.,Rockford,IL 61101
01963	Cherry Elctrc.,Waukegan,IL 60085
02111	Spectrol Elctrns.,City of Industry,CA 91745
02114	Ferroxcube.,Saugerties,NY 12477
02606	Fenwall Lab.,Morton Grove,IL 60053
02639	GE.,Schenectady,NY 12307
02660	Amphenol.,Broadview,IL 60153
02735	RCA.,Somerville,NJ 08876
02768	Fastex.,Desplains,IL 60016
03042	Carter Ink.,Cambridge,MA 02142
03508	GE.,Syracuse,NY 13201
03550	Vanguard Elctrns.,Inglewood,CA 90302
03636	Grayburne.,Yonkers,NY 10701
03877	Transitron Elctrns.,Wakefield,MA 01880
03888	KDI Pyrofilm ,Whippany,NJ 07981
03911	Clairex.,New York,NY 10001
04009	Arrow Hart.,Hartford,CT 06106
04643	Digitronics.,Albertson,NY 11507
04713	Motorola.,Phoenix,AZ 85008
04919	Component Mfg.,W.Bridgewater,MA 02379
05079	Tansistor Elctrns.,Bennington,VT 05201
05245	Corcom.,Chicago,IL 60639
05276	ITT Elctrns.,Pomona,CA 91766
05402	Controls Co.of Amer.,Melrose Pk,IL 60160
05574	Viking Inds.,Chatsworth,CA 91311
05624	Barber Colman.,Rockford,IL 61101
05748	Barnes Mfg.,Mansfield,OH 44901
05820	Wakefield Eng.,Wakefield,MA 01880
06383	Panduit.,Tinley Pk,IL 60477
06406	Truelove & Maclean.,Waterbury,CT 06708
06665	Precision Monolith.,Santa Clara,CA 95050
06743	Clevite.,Cleveland,OH 44110
06795	WLS Stamp.,Cleveland,OH 44104
06915	Richco Plstc.,Chicago,IL 60646
06928	Teledyne Kntcs.,Soland Bch,CA 92075
06978	Aladdin Elctrns.,Nashville,TN 37210
07047	Ross Milton.,Southampton,PA 18966
07126	Digitran.,Pasadena,CA 91105
07127	Eagle Signal.,Baraboo,WI 53913
07233	Cinch Graphik.,City of Industry,CA 91744
07261	Avnet.,Culver City,CA 90230
07263	Fairchild.,Mountain View,CA 94040
07387	Birtcher.,N.Los Angeles,CA 90032
07595	Amer.Semicond.,Arlington Hts,IL 60004
07699	Magnetic Core.,Newburgh,NY 12550
07707	USM Fastener.,Shelton,CT 06484
07828	Bodine.,Bridgeport,CT 06605
07829	Bodine Elctrc.,Chicago,IL 60618
07910	Cont Device.,Hawthorne,CA 90250
07983	State Labs.,New York,NY 10003
07999	Borg Inst.,Delavan,WI 53115
08524	Deutsch Fastener.,Los Angeles,CA 90045
08556	Bell Elctrc.,Chicago,IL 60632
08730	Vemaline Prod.,Franklin Lakes,NJ 07417
09213	GE.,Buffalo,NY 14220
09353	C&K Components.,Watertown,MA 02172
09408	Star-Tronics.,Georgetown,MA 01830
09823	Burgess Battery.,Freeport,IL 61032
09856	Fenwal Elctrns.,Framingham,MA 01701
09922	Burndy.,Norwalk,CT 06852
10025	Glasseal Prod.,Linden,NJ 07036
10389	Chicago Switch.,Chicago,IL 60647
11236	CTS of Berne.,Berne,IN 46711
11599	Chandler Evans.,W.Hartford,CT 06101
11983	Nortronics.,Minneapolis,MN 55427
12040	National.,Santa Clara,CA 95051
12045	Elctrc Transistors.,Flushing,NY 11354
12498	Teledyne.,Mountain View,CA 94043
12617	Hamlin.,Lake Millis,WI 53551
12672	RCA ,Woodbridge,NJ 07095
12697	Clarostat.,Dover,NH 03820
12856	Micrometals.,City of Industry,CA 91744
12954	Dickson Elctrns.,Scottsdale,AZ 85252
12969	Unitrode ,Watertown,MA 02172
13094	Electrocraft.,Hopkins,MN 55343
13103	Thermalloy.,Dallas,TX 75234
13148	Vogue Inst.,Richmond Hill,NY 11418
13150	Vernitron.,Laconia,NH 03246
13327	Solitron Devices.,Tappan,NY 10983
13715	Fairchild.,San Rafael,CA 94903
13919	Burr Brown.,Tucson,AZ 85706
14010	Anadex Inst.,Van Nuys,CA 91406
14195	Elctrc Controls.,Wilton,CT 06897
14196	American Labs.,Fullerton,CA 92634
14332	Relton.,Arcadia,CA 91006
14433	ITT.,W.Palm Beach,FL 33402
14482	Watkins & Johnson.,Palo Alto,CA 94304
14608	Corbin.,Berlin,CT 06037
14655	Cornell Dubilier.,Newak,NJ 07101
14674	Corning Glass.,Corning,NY 14830
14749	Acopian.,Easton,PA 18042
14752	Electrocube.,San Gabriel,CA 91776
14889	R&G Sloan.,Sun Valley,CA 91352
14908	Elctrc Inst & Spclty.,Stoneham,MA 02180
14936	General Inst.,Hicksville,NY 11802
15238	ITT.,Lawrence,MA 08142
15476	Digital Equip.,Maynard,MA 01754
15605	Cutler Hammer ,Milwaukee,WI 53202
15782	Houston Inst.,Bellaire,TX 77401
15801	Fenwal Elctrns.,Framingham,MA 01701
15819	Sinclair & Rush.,St.Louis,MO 63111
16037	Spruce Pine Mica.,Spruce Pine,NC 28777
16068	Intntl Diode.,Jersey City,NJ 07304
16179	Ommi Spectra.,Farmington,MI 48024
16301	Astrolab.,Linden,NJ 07036
16352	Codi.,Fairlawn,NJ 07410
16485	Sterling Inst.,New Hyde Park,NY 11040
16636	Indiana General.,Oglesby,IL 61348
16758	Delco.,Kokomo,IN 46901
16950	Precision Dynamics.,Burbank,CA 91504
16952	Amer Micro Devices.,Summerville,SC 29483
17117	Elctrc Molding.,Woonsocket,RI 02895
17540	Mohawk Spring.,Schiller Park,IL 60176
17745	Angstrohm Precsn.,Hagerstown,MD 21740
17771	Singer.,Somerville,NJ 08876
17850	Zeltex.,Concord,CA 94520
17856	Siliconix.,Santa Clara,CA 95054
18324	Signetics.,Sunnyvale,CA 94086
18542	New Prod Eng.,Wabash,IN 46992
18677	Scanbe.,El Monte,CA 91731
18736	Computer Diode.,S.Fairlawn,NJ 07936
18795	Cycon.,Sunnyvale,CA 94086
18911	Durant.,Watertown,WI 53094
19178	Zero.,Monson,MA 01057
19209	GE.,Gainesville,FL 32601
19373	Eastron.,Haverhill,MA 01830
19396	Paktron.,Vienna,VA 22180
19617	Cabtron.,Chicago,IL 60622
19644	LRC Elctrns.,Horseheads,NY 14845
19701	Electra.,Independence,KS 67301
20093	Elect Inds.,Murray Hill,NJ 07974
20754	KMC.,Long Valley,NJ 07853
21335	Fafnir Bearing.,New Britian,CT 06050
21688	Raytheon.,Norwood,MA 02062
21759	Lenox Fugle.,Watchung,NJ 07060
22526	Berg Elctrcs.,New Cumberland,PA 17070
22589	Electro Space Fabrctrs.,Topton,PA 19562
22753	UID Elctrcs.,Hollywood,FL 33022
23338	Wavetek.,San Diego,CA 92112
23342	Avnet Elctrcs.,Franklin Park,IL 60131
23936	Pamotor.,Bulingham,CA 94010
24351	Indiana Gnrl Elctrc.,Keasby,NJ 08832
24355	Analog Devices.,Cambridge,MA 02142
24444	General Semicond.,Tempe,AZ 85281
24446	GE.,Schenectady,NY 12305
24454	GE.,Syracuse,NY 13201
24455	GE.,Cleveland,OH 44112
24602	EMC Technlgy.,Cherry Hill,NJ 08034
24655	Gen Rad.,Concord,MA 01742
24759	Lenox Fugle.,S.Plainfield,NJ 07080
25008	Vactite.,Berkeley,CA 94710
25289	EG&G.,Bedford,MA 01730
26601	Tri-County Tube.,Nunda,NY 14517
26805	Omni Spectra.,Waltham,MA 02154
26806	American Zettler.,Costa Mesa,CA 92626
27014	National.,Santa Clara,CA 95051
27545	Hartford Universal Ball.,Rocky Hill,CT 06067
28480	HP.,Palo Alto,CA 94304
28520	Heyman Mfg.,Kenilworth,NJ 07033
28875	IMC Magnetics.,Rochester,NH 03867
28959	Hoffman Elctrcs.,El Monte,CA 91734
30043	Solid State Devices.,LaMirada,CA 90638
30646	Beckman Inst.,Cedar Grove,NJ 07009
30874	IBM.,Armonk,NY 10504
30985	Permag Magnetics.,Toledo,OH 43609
31019	Solid State Scntfc.,Montgomerville,PA 18936
31514	Standford Appld Engs.,Costa Mesa,CA 92626
31814	Analogic.,Wakefield,MA 01880
31951	Triridge.,Pittsburgh,PA 15231
32001	Jensen.,Chicago,IL 60638
33095	Spectrum Control.,Fairview,PA 16415
33173	GE.,Owensboro,KY 42301
34141	Koehler.,Marlboro,MA 01752
34156	Semicoa.,Costa Mesa,CA 92626
34333	Silicon Genrl.,Westminster,CA 92683
34335	Advanced Micro Devices.,Sunnyvale,CA 94086
34649	Intel.,Santa Clara,CA 95051
34677	Solitron Devices.,Jupiter,FL 33458
35929	Constanta.,Montreal,QUE,CAN
36462	National Ltd.,Montreal,QUE,CAN
37942	Mallory.,Indianapolis,IN 46206
38443	Marlin Rockwell.,Jamestown,NY 14701
39317	McGill Mfg.,Valpariso,IN 46383
40931	Honeywell.,Minneapolis,MN 55408
42190	Muter.,Chicago,IL 60638
42498	National.,Melrose,MA 02176
43334	New Departure-Hyatt.,Sandusky,OH 44870
43991	Norma Hoffman.,Stanford,CT 06904
49671	RCA.,New York,NY 10020
49956	Raytheon.,Waltham,MA 02154
50088	Mostek.,Carrollton,TX 75006
50101	GHZ Devices.,S.Chelmsford,MA 01824
50507	Micro Networks.,Worcester,MA 01606
50522	Monsanto.,Palo Alto,CA 94304
50721	Datel Systems.,Canton,MA 02021
51167	Aries Elctrcs.,Frenchtown,NJ 08825
51553	Diablo Systems.,Hayward,CA 94545
51642	Centre Eng.,State College,PA 16801
52648	Plessev.,Santa Ana,CA 92705
52676	SKF Inds.,Philadelphia,PA 19132
52763	Stettner Trush., Cazenovia, NY 13035
53021	Sangamo Elctrc.,Springfield,IL 62705
53184	Xciton.,Latham,NY 12110
53421	Tyton.,Milwaukee,WI 53209
54294	Shallcross.,Selma,NC 27576
54297	Assoc Prec Prod.,Huntsville,AL 35805
54715	Shure Bros.,Evanston,IL 60202
56289	Sprague.,North Adams,MA 01247
57771	Stimpson.,Bayport,NY 11705
58553	Superior Valve.,Washington,PA 15301
59730	Thomas & Betts.,Elizabeth,NJ 07207
59875	TRW.,Cleveland,OH 44117
60399	Torrington.,Torrington,CT 06790
61007	Townsend.,Braintree,MA 02184
61637	Union Carbide.,New York,NY 10017
61864	United Carr Fast.,Boston,MA
63060	Victoreen.,Cleveland,OH 44104
63743	Ward Leonard.,Mt.Vernon,NY 10550
65083	Westinghouse.,Bloomfield,NJ 07003
65092	Weston.,Newark,NJ 07114
70106	Acushnet Cap.,New Bedford,MA 02742
70109	Adams & Westlake.,Elkhart,IN 46514
70417	Chrysler.,Detroit,MI 48231
70485	Atlantic India Rubber.,Chicago,IL 60607
70563	Amperite.,Union City,NJ 07087
70611	Ark-Les Switch.,Watertown,MA 02172
70892	Bead Chain.,Bridgeport,CT 06605
70903	Belden.,Chicago,IL 60644
71126	Bronson.,Beacon Falls,CT 06403
71279	Cambridge Thermionic.,Cambridge,MA 02138
71294	Canfield.,Clifton Forge,VA 24422
71400	Bussmann.,St.Louis,MO 63107
71450	CTS.,Elkhart,IN 46514
71468	Cannon.,Los Angeles,CA 90031
71482	Clare.,Chicago,IL 60645
71590	Centralab.,Milwaukee,WI 53212
71666	Continental Carbon.,New York,NY
71707	Coto Coil.,Providence,RI 02905
71729	Crescent Box.,Philadelphia,PA 19134
71744	Chicago Min Lamp.,Chicago,IL 60640
71785	Cinch.,Chicago,IL 60624
71823	Darnell.,Downey,CA 90241
72136	Electromotive.,Willimantic,CT 06226
72228	Continental Screw.,New Bedford,MA 02742
72259	Nytronics.,Berkeley Hts,NJ 07922
72619	Dialight.,Brooklyn,NY 11237
72699	General Inst.,Newark,NJ 07104
72765	Drake.,Chicago,IL 60631
72794	Dzus Fastener.,W. Islip,NY 11795
72825	Eby.,Philadelphia,PA 19144
72962	Elastic Stop Nut.,Union,NJ 07083
72982	Erie.,Erie,PA 16512
73445	Amperex Elctrcs.,Hicksville,NY 11801
73559	Carling Elctrc.,Hartford,CT 06110
73690	Elco Resistor.,New York,NY
73803	TI.,Attleboro,MA 02703
73899	JFD Elctrcs.,Brooklyn,NY 11219
73957	Groov-Pin.,Ridgefield,NJ 07657
74193	Heinemann.,Trenton,NJ 08602
74199	Quam Nichols.,Chicago,IL 60637
74445	Holo-Krome.,Hartford,CT 06110
74545	Hubbell.,Stratford,CT 06497
74861	Industrial Cndnsr.,Chicago,IL 60618
74868	Amphenol.,Danbury,CT 06810
74970	Johnson.,Waseca,MN 56093
75042	IRC(TRW).,Burlington,IA 52601
75376	Kurz-Kasch.,Dayton,OH 45401
75382	Kuka.,Mt Vernon,NY 10551
75491	Lafayette.,Syosset,NY 11791
75608	Linden.,Providence,RI 02905
75915	Littelfuse.,Des Plains,IL 60016
76005	Lord Mfg.,Erie,PA 16512
76149	Mallory Elctrc.,Detroit,MI 48204
76241	Maurey.,Chicago,IL 60616
76381	3 M Co.,St.Paul,MN 55101
76385	Minor Rubber.,Bloomfield,NJ 07003
76487	Millen.,Malden,MA 02148
76545	Mueller Elctr.,Cleveland,OH 44114
76684	National Tube.,Pittsburg,PA
76854	Oak Inds.,Crystal Lake,IL 60014
77132	Dot Fastener.,Waterbury,CT 06720
77147	Patton MacGuyer.,Providence,RI 02905
77166	Pass Seymour.,Syracuse,NY 13209
77263	Pierce Roberts Rubber.,Trenton,NJ 08638
77315	Platt Bros.,Waterbury,CT 06720
77339	Positive Lockwasher.,Newark,NJ
77342	AMF.,Princeton,IN 47570
77542	Ray-o-Vac.,Madison,WI 53703
77630	TRW.,Camden,NJ 08103
77638	General Inst.,Brooklyn,NY 11211
78189	Shakeproof.,Elgin,IL 60120
78277	Sigma Inst.,Braintree,MA 02184
78429	Airco Speer.,St Marys,PA 15867
78488	Stackpole.,St Marys,PA 15867
78553	Tinnerman.,Cleveland,OH
78711	Telephonics.,Huntington,NY 11743
79089	RCA.,Harrison,NJ 07029
79136	Waldes Kohinoor.,New York,NY 11101
79497	Western Rubber.,Goshen,IN 46526
79725	Wiremold.,Hartford,CT 06110
79727	Continental Wirt.,Philadelphia,PA 19101
79840	Mallory Controls.,Frankfort,IN 46041
79963	Zierick.,Mt Kisco,NY 10549
80009	Tektronix.,Beaverton,OR 97005
80030	Prestole Fastener.,Toledo,OH 43605
80048	Vickers.,St Louis,MO 63166
80103	Lambda.,Melville,NY 11746
80183	Sprague.,N.Adams,MA 01247
80211	Motorola.,Franklin Pk,IL 60131
80251	Formica.,Cincinnati,OH 45232
80258	Standard Oil.,Lafeyette,IN 47902
80294	Bourns Labs.,Riverside,CA 92506
80368	Sylvania.,New York,NY 10017
80431	Air Filter.,Milwaukee,WI 53218
80583	Hammarlund.,New York,NY 10010
80740	Beckman Inst.,Fullerton,CA 92634
80756	TRW Ramsey.,St Louis,MO 63166
80894	Pure Carbon.,St Marys,PA 15857
81030	Int'l Inst.,Orange,CT 06477
81073	Grayhill.,LaGrange,IL 60525
81143	Isolantite.,Stirling,NJ 07980
81312	Winchester.,Oakville,CT 06779
81349	Military Specifications
81350	Joint Army-Navy Specifications
81483	Int'l Rectifier.,El Segundo,CA 90245
81741	Chicago Lock.,Chicago,IL 60641
81831	Filtron.,Flushing,NY 11354
81840	Ledex.,Dayton,OH 45402
81860	Barry Wright.,Watertown,MA 02172
82219	Sylvania.,Emporium,PA 15834
82227	No.Amer.Philips.,Cheshire,CT 06410
82273	IN Pattern & Model.,LaPort,IN 46350
82389	Switchcraft.,Chicago,IL 60630
82567	Reeves Hoffman.,Carlisle,PA 17013
82647	Metals & Controls.,Attleboro,MA 02703
82807	Milwaukee Resistor.,Milwaukee,WI 53204
82877	Rotron.,Woodstock,NY 12498
82901	IN General Magnet.,Valparaiso,IN 46383
83003	Varo.,Garland,TX 75040
83014	Hartwell.,Placentia,CA 92670
83033	Meissner.,Mt Carmel,IL 62863
83058	Carr Fastener.,Cambridge,MA 02142
83186	Victory Eng.,Springfield,NJ 07081
83259	Parker Seal.,Culver City,CA 90231
83330	H.H.Smith.,Brooklyn,NY 11207
83361	Bearing Spclty.,San Francisco,CA
83587	Solar Elctrc.,Warren,PA 16365
83594	Burroughs.,Plainfield,NJ 07061
83740	Union Carbide.,New York,NY 10017
83766	Mass Engrg.,Quincy,MA 02171
83781	National Elctrcs.,Geneva,IL 60134
84411	TRW.,Ogallala,NB 69153
84835	Lehigh Metals.,Cambridge,MA 02140
84970	Sarkes Tarzian.,Bloomington,IN 47401
84971	TA Mfg.,Los Angeles,CA 90039
85604	Kepco.,Flushing,NY 11352
86420	Payson Casters.,Gurnee,IL 60031
86577	Prec Metal Prod.,Stoneham,MA 02180
86684	RCA.,Harrison,NJ 07029
86687	REC.,New Rochelle,NY 10801
86800	Cont Elctrcs.,Brooklyn,NY 11222
88140	Cutler Hammer.,Lincoln,IL 62656
88204	GTE Sylvania.,Ipswitch,MA 01938
88219	Gould Nat Battery.,Trenton,NJ 08607
88419	Cornell Dubilier.,Fuquay Varina,NC 27526
88627	K&G Mfr.,New York,NY
89265	Potter & Brumfield.,Princeton,IN 47671
89482	Holtzer Cabot.,Boston,MA 02119
89665	United Transformer.,Chicago,IL
89870	Berkshire Transformer.,Kent,CT 06757
90201	Mallory Cap.,Indianapolis,IN 46206
90303	Mallory Bat.,Tarrytown,NY 10591
90634	Gulton Inds.,Metuchen,NJ 08840
90750	Westinghouse.,Boston,MA 02118
90952	Hardware Prod.,Reading,PA 19602
91032	Continental Wire.,York,PA 17405
91146	Cannon.,Salem,MA 01970
91210	Gerber.,Mishawaka,IN 46544
91293	Johanson.,Boonton,NJ 07005
91417	Harris.,Melbourne,FL 32901
91506	Augat Bros.,Attleboro,MA 02703
91598	Chandler.,Wethersfield,CT 06109
91637	Dale Elctrcs.,Columbus,NE 68601
91662	Elco.,Willow Grove,PA 19090
91719	General Inst.,Dallas,TX 75220
91836	Kings Elctrcs.,Tuckahoe,NY 11223
91916	Mephisto Tool.,Hudson,NY 12534
91929	Honeywell.,Freeport,IL 61032
92519	Electra Insul.,Woodside,NY 11377
92678	Edgerton Germeshuasen.,Boston,MA 02115
92702	IMC Magnetics ,Westbury,NY 11591
92739	Ampex.,Redwood City,CA 94063
92966	Hudson Lamp.,Kearny,NJ 07032
93332	Sylvania.,Woburn,MA 01801
93346	Amer Elctrcs Labs.,Lansdale,PA 19446
93618	R&C Mfg.,Ramsey,PA 16671
93916	Cramer.,New York,NY 10013
94144	Raytheon.,Quincy,MA 02169
94154	Wagner Elctrc.,Livingston,NJ 07039
94271	Weston.,Archibald,PA 18403
94322	Tel Labs.,Manchester,NH 03102
94589	Dickson.,Chicago,IL 60619
94696	Magnecraft.,Chicago,IL 60630
94800	Atlas Ind.,Brookline,NH 03033
95076	Garde.,Cumberland,RI 02864
95121	Quality Comp.,St Marys,PA 15857
95146	Alco Elctrcs.,Lawrence,MA 01843
95238	Continental Conn.,Woodside,NY 11377
95275	Vitramon.,Bridgeport,CT 06601
95348	Gordos.,Bloomfield,NJ 07003
95354	Methode.,Rolling Meadow,IL 60008
95794	Amer Brass.,Torrington,CT 06790
95987	Weckesser.,Chicago,IL 60646
96095	Aerovox Hi Q.,Olean,NY 14760
96341	Microwave Assoc.,Burlington,MA 01801
96906	Military Standards
97918	Linemaster Switch.,Woodstock,CT 06281
98291	Sealectro.,Mamaroneck,NY 10544
98474	Compar.,Burlingame,CA 94010
98821	North Hills.,Glen Cove,NY 11542
99017	Protective Closures.,Buffalo,NY 14207
99117	Metavac.,Flushing,NY 11358
99313	Varian.,Palo Alto,CA 94303
99378	Atlee.,Winchester,MA 01890
99800	Delevan.,E.Aurora,NY 14052
99934	Renbrandt.,Boston,MA 02118
99942	Centralab.,Milwaukee,WI 53201

JANUARY 1978

Figure 6-3. Main (MB) board, 1687-4700, digital processor, memories, interfaces.

Figure 6-4. Main (MB) board, 1687-4700, layout. (Refer to Table 5-10 for an index.)

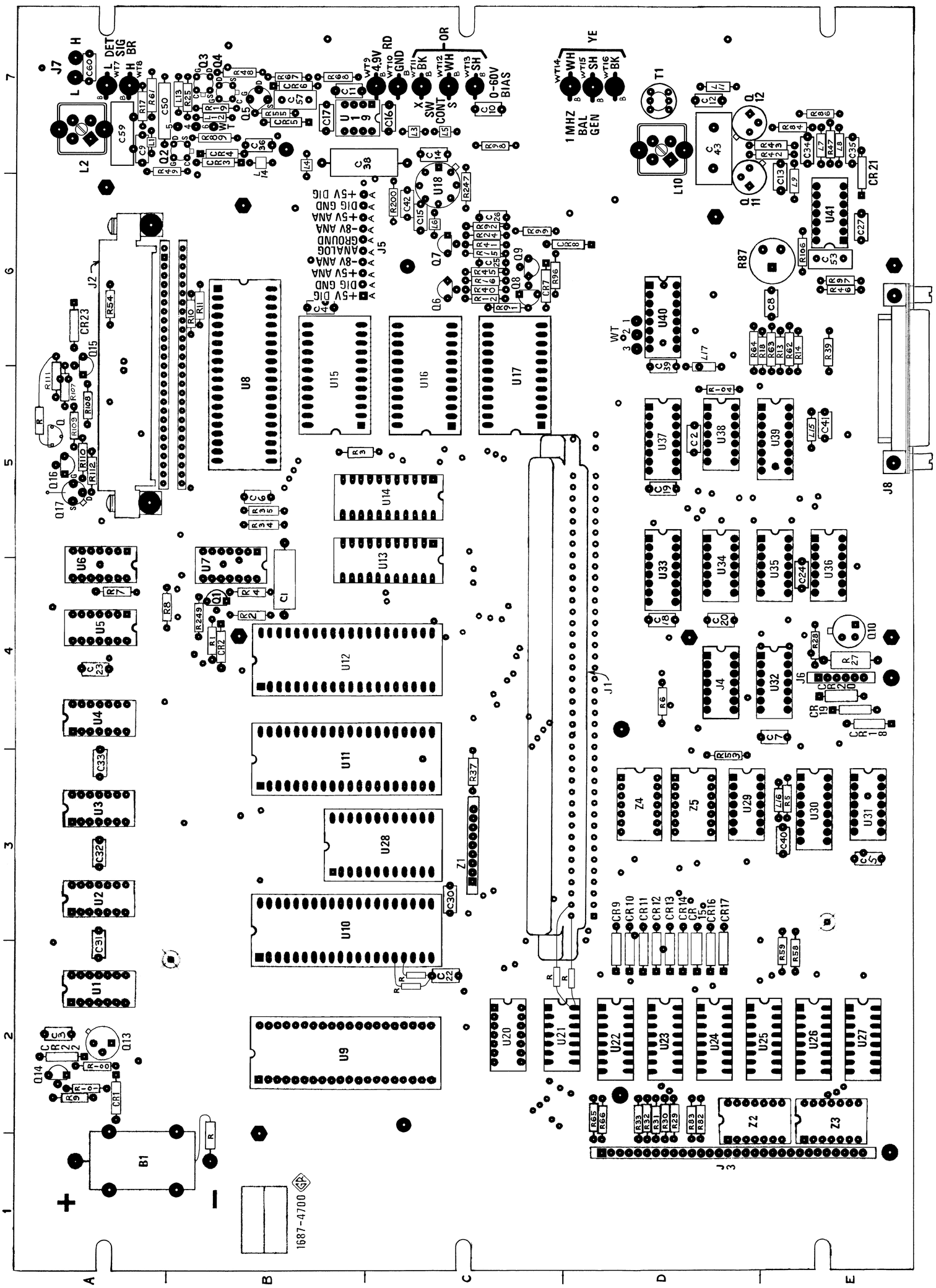

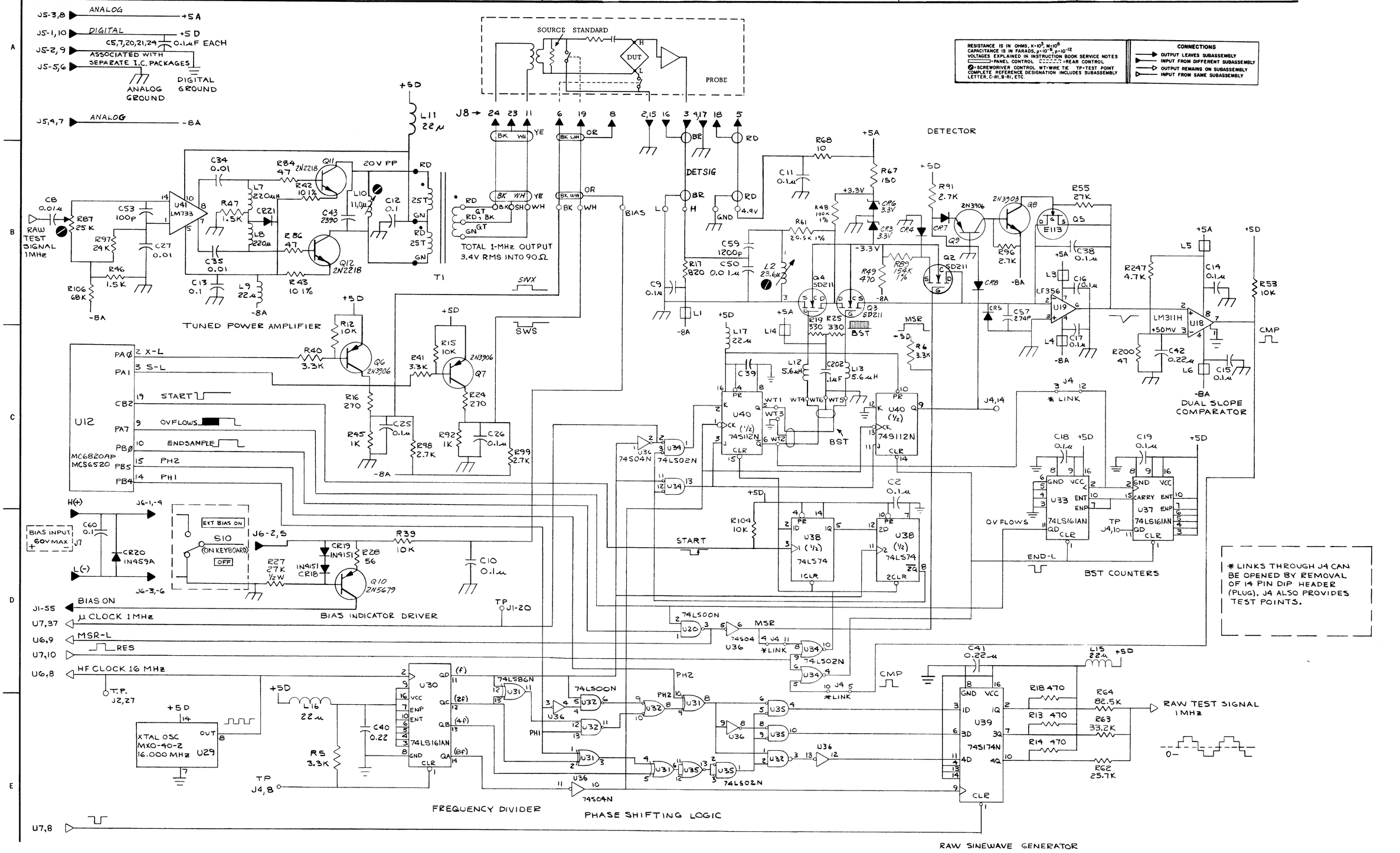

Figure 6-5. Main (MB) board, 1687-4700, analog circuitry.

ELECTRICAL PARTS LIST

ANALOG & CONTROL PC BOARD ASM MB P/N 1687-4700

REFDES		DESCRIPTION	PART NO.	FMC	MFGR PART NUMBER
C	1	CAP TANT 10 UF 20PCT 20V	4450-5100	56289	150D106X002082
C	2	CAP CER MONO 0.1UF 20PCT 50VGP	4400-2050	72982	8131-M050-651-104M
C	3	CAP CER MONO 0.1UF 20PCT 50VGP	4400-2050	72982	8131-M050-651-104M
C	4	CAP CER MONO 0.1UF 20PCT 50VGP	4400-2050	72982	8131-M050-651-104M
C	5	CAP CER MONO 0.1UF 20PCT 50VGP	4400-2050	72982	8131-M050-651-104M
C	6	CAP CER MONO 0.1UF 20PCT 50VGP	4400-2050	72982	8131-M050-651-104M
C	7	CAP CER MONO 0.1UF 20PCT 50VGP	4400-2050	72982	8131-M050-651-104M
C	8	CAP CER DISC .01UF 80/20PCT 100V	4401-3100	72982	0805540Z5U00103Z
C	9	CAP CER MONO 0.1UF 20PCT 50VGP	4400-2050	72982	8131-M050-651-104M
C	10	CAP CER SQ .10UF 80/20PCT 100V	4403-4100	72982	8131M100651104Z
C	11	CAP CER MONO 0.1UF 20PCT 50VGP	4400-2050	72982	8131-M050-651-104M
C	12	CAP CER MONO 0.1UF 20PCT 50VGP	4400-2050	72982	8131-M050-651-104M
C	13	CAP CER MONO 0.1UF 20PCT 50VGP	4400-2050	72982	8131-M050-651-104M
C	14	CAP CER MONO 0.1UF 20PCT 50VGP	4400-2050	72982	8131-M050-651-104M
C	15	CAP CER MONO 0.1UF 20PCT 50VGP	4400-2050	72982	8131-M050-651-104M
C	16	CAP CER MONO 0.1UF 20PCT 50VGP	4400-2050	72982	8131-M050-651-104M
C	17	CAP CER MONO 0.1UF 20PCT 50VGP	4400-2050	72982	8131-M050-651-104M
C	18	CAP CER MONO 0.1UF 20PCT 50VGP	4400-2050	72982	8131-M050-651-104M
C	19	CAP CER MONO 0.1UF 20PCT 50VGP	4400-2050	72982	8131-M050-651-104M
C	20	CAP CER MONO 0.1UF 20PCT 50VGP	4400-2050	72982	8131-M050-651-104M
C	22	CAP CER MONO 0.1UF 20PCT 50VGP	4400-2050	72982	8131-M050-651-104M
C	23	CAP CER MONO 0.1UF 20PCT 50VGP	4400-2050	72982	8131-M050-651-104M
C	24	CAP CER MONO 0.1UF 20PCT 50VGP	4400-2050	72982	8131-M050-651-104M
C	25	CAP CER DISC .01UF 80/20PCT 100V	4401-3100	72982	0805540Z5U00103Z
C	26	CAP CER DISC .01UF 80/20PCT 100V	4401-3100	72982	0805540Z5U00103Z
C	27	CAP CER DISC .01UF 80/20PCT 100V	4401-3100	72982	0805540Z5U00103Z
C	30	CAP CER MONO 0.1UF 20PCT 50VGP	4400-2050	72982	8131-M050-651-104M
C	31	CAP CER MONO 0.1UF 20PCT 50VGP	4400-2050	72982	8131-M050-651-104M
C	32	CAP CER MONO 0.1UF 20PCT 50VGP	4400-2050	72982	8131-M050-651-104M
C	33	CAP CER MONO 0.1UF 20PCT 50VGP	4400-2050	72982	8131-M050-651-104M
C	34	CAP CER DISC .01UF 80/20PCT 100V	4401-3100	72982	0805540Z5U00103Z
C	35	CAP CER DISC .01UF 80/20PCT 100V	4401-3100	72982	0805540Z5U00103Z
C	36	CAP CER MONO 0.1UF 20PCT 50VGP	4400-2050	72982	8131-M050-651-104M
C	38	CAP POLYPROPYL 0.1UF 10PCT 200V	4863-3000	84411	X363UW 0.1UF 10PCT
C	39	CAP CER MONO 0.22UF 20PCT 50VGP	4400-2052	72982	8131-M050-651-224M
C	40	CAP CER MONO 0.22UF 20PCT 50VGP	4400-2052	72982	8131-M050-651-224M
C	41	CAP CER MONO 0.22UF 20PCT 50VGP	4400-2052	72982	8131-M050-651-224M
C	42	CAP CER MONO 0.22UF 20PCT 50VGP	4400-2052	72982	8131-M050-651-224M
C	43	CAP MICA 2390 PF 1PCT 500V	4851-0273	72136	DM20FD2390PF1PCT4CR
C	50	CAP MYLAR .01UF 2 PCT 100V	4860-7650	56289	410P .01 UF 2PCT
C	53	CAP MICA 100PF 1PCT 500V	4710-0010	81349	CM05FD101FN
C	57	CAP MICA 274PF 1PCT 500V	4710-0448	81349	CM05FD274FN
C	59	CAP MICA 1200PF 1PCT 500V	4710-1210	81349	CM06FD122FN
C	60	CAP CER SQ .10UF 80/20PCT 100V	4403-4100	72982	8131M100651104Z
CR	1	DIODE HP5082-2800 IR 200NA SI	6082-1034	28480	HP-5082-2800
CR	2	DIODE HP5082-2800 IR 200NA SI	6082-1034	28480	HP-5082-2800
CR	3	ZENER 1N746 3.3V 10PCT .4W	6083-1005	14433	1N746
CR	4	DIODE 1N4151 75PIV IR.1UA SI	6082-1001	14433	1N3604
CR	5	DIODE 1N4151 75PIV IR.1UA SI	6082-1001	14433	1N3604
CR	6	ZENER 1N746 3.3V 10PCT .4W	6083-1005	14433	1N746
CR	7	DIODE 1N4151 75PIV IR.1UA SI	6082-1001	14433	1N3604
CR	8	DIODE 1N4151 75PIV IR.1UA SI	6082-1001	14433	1N3604
CR	9	DIODE 1N4151 75PIV IR.1UA SI	6082-1001	14433	1N3604
CR	10	DIODE 1N4151 75PIV IR.1UA SI	6082-1001	14433	1N3604
CR	11	DIODE 1N4151 75PIV IR.1UA SI	6082-1001	14433	1N3604
CR	12	DIODE 1N4151 75PIV IR.1UA SI	6082-1001	14433	1N3604
CR	13	DIODE 1N4151 75PIV IR.1UA SI	6082-1001	14433	1N3604
CR	14	DIODE 1N4151 75PIV IR.1UA SI	6082-1001	14433	1N3604
CR	15	DIODE 1N4151 75PIV IR.1UA SI	6082-1001	14433	1N3604
CR	16	DIODE 1N4151 75PIV IR.1UA SI	6082-1001	14433	1N3604
CR	17	DIODE 1N4151 75PIV IR.1UA SI	6082-1001	14433	1N3604
CR	18	DIODE 1N4151 75PIV IR.1UA SI	6082-1001	14433	1N3604
CR	19	DIODE 1N4151 75PIV IR.1UA SI	6082-1001	14433	1N3604
CR	20	DIODE 1N459A 175PIV IR.025UA SI	6082-1011	14433	1N459A
CR	21	DIODE 1N4151 75PIV IR.1UA SI	6082-1001	14433	1N3604
CR	22	ZENER 1N746 3.3V 10PCT .4W	6083-1005	14433	IN746
CR	23	ZENER CDXXXX 5.0V 1PCT .4W	6083-1102	24655	6083-1102
J	1	CONNECTOR PC 40 POS DR	1657-0400	24655	1657-0400
J	2	CONNECTOR PC 25 POS DR	4230-5008	24655	4230-5008
J	3	HEADER FEMALE 30 CONT	4230-8048	30146	929850-30
J	4	HEADER 14 PIN	4220-5700	04919	F1008-14
J	6	HEADER FEMALE 6 CONT	4230-8044	30146	929850-6
J	7	BIAS TERMINAL	1658-6002	24655	1658-6002
J	8	CABLE ASM	1687-2010	24655	1687-2010

ANALOG & CONTROL PC BOARD ASM MB P/N 1687-4700

REFDES		DESCRIPTION	PART NO.	FMC	MFGR PART NUMBER
L	1	FERRITE BEAD	5000-1250	02114	56-590-65/4B
L	1	JUMPER PC .250 20 WIRE	5080-0800	24655	5080-0800
L	2	CHOKE ADJ CORE 17.6-26.4 UH	4290-4221	71279	558-7106-18
L	3	FERRITE BEAD	5000-1250	02114	56-590-65/4B
L	3	JUMPER PC .250 20 WIRE	5080-0800	24655	5080-0800
L	4	FERRITE BEAD	5000-1250	02114	56-590-65/4B
L	4	JUMPER PC .250 20 WIRE	5080-0800	24655	5080-0800
L	5	FERRITE BEAD	5000-1250	02114	56-590-65/4B
L	5	JUMPER PC .250 20 WIRE	5080-0800	24655	5080-0800
L	6	FERRITE BEAD	5000-1250	02114	56-590-65/4B
L	6	JUMPER PC .250 20 WIRE	5080-0800	24655	5080-0800
L	7	CHOKE MOLDED 220 UH 10PCT	4300-7556	72259	DD-220
L	8	CHOKE MOLDED 220 UH 10PCT	4300-7556	72259	DD-220
L	9	CHOKE MOLDED 22 UH 10PCT	4300-7527	72259	DD-22
L	10	CHOKE ADJ CORE 8-12 UH	4290-4220	71279	558-7106-16
L	11	CHOKE MOLDED 22 UH 10PCT	4300-7527	72259	DD-22
L	12	CHOKE MOLDED 5.6 UH 10PCT	4300-7557	72259	DD-5.6
L	13	CHOKE MOLDED 5.6 UH 10PCT	4300-7557	72259	DD-5.6
L	14	FERRITE BEAD	5000-1250	02114	56-590-65/4B
L	14	JUMPER PC .250 20 WIRE	5080-0800	24655	5080-0800
L	15	CHOKE MOLDED 22 UH 10PCT	4300-7527	72259	DD-22
L	16	CHOKE MOLDED 22 UH 10PCT	4300-7527	72259	DD-22
L	17	CHOKE MOLDED 22 UH 10PCT	4300-7527	72259	DD-22
Q	1	TRANSISTOR 2N3414	8210-1290	56289	2N3414
Q	2	TRANSISTOR SD211	8210-1285	18324	SD211
Q	3	TRANSISTOR SD211	8210-1285	18324	SD211
Q	4	TRANSISTOR SD211	8210-1285	18324	SD211
Q	5	TRANSISTOR E-113	8210-1229	17856	E-113
Q	6	TRANSISTOR 2N3906	8210-1112	04713	2N3906
Q	7	TRANSISTOR 2N3906	8210-1112	04713	2N3906
Q	8	TRANSISTOR 2N3903	8210-1132	04713	2N3903
Q	9	TRANSISTOR 2N3906	8210-1112	04713	2N3906
Q	10	TRANSISTOR 2N5679	8210-1223	04713	2N5679
Q	11	TRANSISTOR 2N2218	8210-1028	04713	2N2218
Q	12	TRANSISTOR 2N2218	8210-1028	04713	2N2218
Q	13	TRANSISTOR 2N2904	8210-1074	04713	2N2904
Q	14	TRANSISTOR 2N3903	8210-1132	04713	2N3903
Q	15	TRANSISTOR 2N3906	8210-1112	04713	2N3906
Q	16	TRANSISTOR 2N3903	8210-1132	04713	2N3903
Q	17	TRANSISTOR MU258	8210-1229	17856	E-113
R	1	RES COMP 10 K 5PCT 1/4W	6099-3105	81349	RCR07G103J
R	2	RES COMP 1.0 K 5PCT 1/4W	6099-2105	81349	RCR07G102J
R	3	RES COMP 3.3 K 5PCT 1/4W	6099-2335	81349	RCR07G332J
R	4	RES COMP 10 K 5PCT 1/4W	6099-3105	81349	RCR07G103J
R	5	RES COMP 3.3 K 5PCT 1/4W	6099-2335	81349	RCR07G332J
R	6	RES COMP 3.3 K 5PCT 1/4W	6099-2335	81349	RCR07G332J
R	7	RES COMP 3.3 K 5PCT 1/4W	6099-2335	81349	RCR07G332J
R	8	RES COMP 3.3 K 5PCT 1/4W	6099-2335	81349	RCR07G332J
R	9	RES COMP 100 OHM 5PCT 1/4W	6099-1105	81349	RCR07G101J
R	10	RES COMP 3.3 K 5PCT 1/4W	6099-2335	81349	RCR07G332J
R	11	RES COMP 3.3 K 5PCT 1/4W	6099-2335	81349	RCR07G332J
R	12	RES COMP 10 K 5PCT 1/4W	6099-3105	81349	RCR07G103J
R	13	RES COMP 470 OHM 5PCT 1/4W	6099-1475	81349	RCR07G471J
R	14	RES COMP 470 OHM 5PCT 1/4W	6099-1475	81349	RCR07G471J
R	15	RES COMP 10 K 5PCT 1/4W	6099-3105	81349	RCR07G103J
R	16	RES COMP 270 OHM 5PCT 1/4W	6099-1275	81349	RCR07G271J
R	17	RES COMP 820 OHM 5PCT 1/4W	6099-1825	81349	RCR07G821J
R	18	RES COMP 470 OHM 5PCT 1/4W	6099-1475	81349	RCR07G471J
R	19	RES COMP 330 OHM 5PCT 1/4W	6099-1335	81349	RCR07G331J
R	24	RES COMP 270 OHM 5PCT 1/4W	6099-1275	81349	RCR07G271J
R	25	RES COMP 330 OHM 5PCT 1/4W	6099-1335	81349	RCR07G331J
R	27	RES COMP 27 K 5PCT 1/2W	6100-3275	81349	RCR20G273J
R	28	RES COMP 56 OHM 5PCT 1/4W	6099-0565	81349	RCR07G560J
R	29	RES COMP 10 K 5PCT 1/4W	6099-3105	81349	RCR07G103J
R	30	RES COMP 10 K 5PCT 1/4W	6099-3105	81349	RCR07G103J
R	31	RES COMP 10 K 5PCT 1/4W	6099-3105	81349	RCR07G103J
R	32	RES COMP 10 K 5PCT 1/4W	6099-3105	81349	RCR07G103J
R	33	RES COMP 10 K 5PCT 1/4W	6099-3105	81349	RCR07G103J
R	34	RES COMP 3.3 K 5PCT 1/4W	6099-2335	81349	RCR07G332J
R	35	RES COMP 3.3 K 5PCT 1/4W	6099-2335	81349	RCR07G332J
R	37	RES COMP 5.6 K 5PCT 1/4W	6099-2565	81349	RCR07G562J
R	39	RES COMP 10 K 5PCT 1/4W	6099-3105	81349	RCR07G103J
R	40	RES COMP 3.3 K 5PCT 1/4W	6099-2335	81349	RCR07G332J
R	41	RES COMP 3.3 K 5PCT 1/4W	6099-2335	81349	RCR07G332J
R	42	RES FLM 10 OHM 1 PCT 1/8W	6250-9100	81349	RN55D10R0F
R	43	RES FLM 10 OHM 1 PCT 1/8W	6250-9100	81349	RN55D10R0F
R	45	RES COMP 1.0 K 5PCT 1/4W	6099-2105	81349	RCR07G102J

ANALOG & CONTROL PC BOARD ASM MB P/N 1687-4700

REFDES	DESCRIPTION	PART NO.	FMC	MFGR PART NUMBER
R 46	RES COMP 1.5 K 5PCT 1/4W	6099-2155	81349	RCR07G152J
R 47	RES COMP 1.5 K 5PCT 1/4W	6099-2155	81349	RCR07G152J
R 48	RES FLM 100K 1 PCT 1/8W	6250-3100	81349	RN55D1003F
R 49	RES COMP 470 OHM 5PCT 1/4W	6099-1475	81349	RCR07G471J
R 53	RES COMP 10 K 5PCT 1/4W	6099-3105	81349	RCR07G103J
R 54	RES COMP 3.3 K 5PCT 1/4W	6099-2335	81349	RCR07G332J
R 55	RES COMP 27 K 5PCT 1/4W	6099-3275	81349	RCR07G273J
R 58	RES COMP 220 OHM 5PCT 1/4W	6099-1225	81349	RCR07G221J
R 59	RES COMP 220 OHM 5PCT 1/4W	6099-1225	81349	RCR07G221J
R 61	RES FLM 20.5K 1 PCT 1/8W	6250-2205	81349	RN55D2052F
R 62	RES FLM 23.7K 1 PCT 1/8W	6250-2237	81349	RN55D2372F
R 63	RES FLM 33.2K 1 PCT 1/8W	6250-2332	81349	RN55D3322F
R 64	RES FLM 82.5K 1 PCT 1/8W	6250-2825	81349	RN55D8252F
R 65	RES COMP 3.3 K 5PCT 1/4W	6099-2335	81349	RCR07G332J
R 66	RES COMP 3.3 K 5PCT 1/4W	6099-2335	81349	RCR07G332J
R 67	RES COMP 150 OHM 5PCT 1/4W	6099-1155	81349	RCR07G151J
R 68	RES COMP 10 OHM 5PCT 1/4W	6099-0105	81349	RCR07G100J
R 82	RES COMP 220 OHM 5PCT 1/4W	6099-1225	81349	RCR07G221J
R 83	RES COMP 220 OHM 5PCT 1/4W	6099-1225	81349	RCR07G221J
R 84	RES COMP 47 OHM 5PCT 1/4W	6099-0475	81349	RCR07G470J
R 86	RES COMP 47 OHM 5PCT 1/4W	6099-0475	81349	RCR07G470J
R 87	POT COMP TRM 25K OHM 20PCT 1T	6040-0800	01121	YR253M
R 89	RES FLM 154K 1 PCT 1/8W	6250-3154	81349	RN55D1543F
R 91	RES COMP 2.7 K 5PCT 1/4W	6099-2275	81349	RCR07G272J
R 92	RES COMP 1.0 K 5PCT 1/4W	6099-2105	81349	RCR07G102J
R 96	RES COMP 2.7 K 5PCT 1/4W	6099-2275	81349	RCR07G272J
R 97	RES COMP 24 K OHM 5PCT 1/4W	6099-3245	81349	RCR07G243J
R 98	RES COMP 2.7 K 5PCT 1/4W	6099-2275	81349	RCR07G272J
R 99	RES COMP 2.7 K 5PCT 1/4W	6099-2275	81349	RCR07G272J
R 100	RES COMP 10 K 5PCT 1/4W	6099-3105	81349	RCR07G103J
R 101	RES COMP 220 OHM 5PCT 1/4W	6099-1225	81349	RCR07G221J
R 104	RES COMP 10 K 5PCT 1/4W	6099-3105	81349	RCR07G103J
R 106	RES COMP 6.8 K 5PCT 1/4W	6099-2685	81349	RCR07G682J
R 107	RES COMP 27 K 5PCT 1/4W	6099-3275	81349	RCR07G273J
R 108	RES COMP 27 K 5PCT 1/4W	6099-3275	81349	RCR07G273J
R 109	RES COMP 27 K 5PCT 1/4W	6099-3275	81349	RCR07G273J
R 110	RES COMP 27 K 5PCT 1/4W	6099-3275	81349	RCR07G273J
R 111	RES COMP 27 K 5PCT 1/4W	6099-3275	81349	RCR07G273J
R 112	RES COMP 3.3 K 5PCT 1/4W	6099-2335	81349	RCR07G332J
R 200	RES COMP 47 OHM 5PCT 1/4W	6099-0475	81349	RCR07G470J
R 247	RES COMP 4.7 K 5PCT 1/4W	6099-2475	81349	RCR07G472J
R 249	RES COMP 10 K 5PCT 1/4W	6099-3105	81349	RCR07G103J
T 1	TOROID TRANSFORMER	1687-2000	24655	1687-2000
U 1	ICD SN74LS20N D 4IN POS NAND GA	5431-8620	01295	SN74LS20N
U 2	ICD SN74LS93N 4BIT BIN COUNTER	5431-8693	01295	SN74LS93N
U 3	ICD SN74LS93N 4BIT BIN COUNTER	5431-8693	01295	SN74LS93N
U 4	ICD SN74LS93N 4BIT BIN COUNTER	5431-8693	01295	SN74LS93N
U 5	ICD CD4024AE 14D 7ST BIN CNT	5431-7008	86684	CD4024AE
U 6	IC DIGITAL SN74LS02N	5431-8602	01295	SN74LS02N
U 7	ICD SN74LS14N HX SCHMT-TR INVERT	5431-8614	01295	SN74LS14N
U 8	ICD MCS6502 40 MICPROC N CHNL	5431-2402	24655	5431-2402
U 9	ICD MC6820A 40D PIA FOR MPU	5431-2450	04713	MC6820A
U 10	ICD MC6820A 40D PIA FOR MPU	5431-2450	04713	MC6820A
U 11	ICD MC6820A 40D PIA FOR MPU	5431-2450	04713	MC6820A
U 12	ICD MC6820A 40D PIA FOR MPU	5431-2450	04713	MC6820A
U 13	ICD P5101L-1 256X4 BIT CMOSRAM	5627-1003	24655	5627-1003
U 14	ICD P5101L-1 256X4 BIT CMOSRAM	5627-1003	24655	5627-1003
U 15	ICD 23168-2 24D	5627-0007	24655	5627-0007
U 16	ICD 23168-3 24D ROM	5627-0008	24655	5627-0008
U 17	ROM 24DIL NMOS MASKED	5627-0003	24655	5627-0003
U 18	IC LINEAR LM311	5432-1023	10204	LM311H
U 19	ICL LF356P 8DIL FET OP AMP	5432-7002	01295	LF356P
U 20	IC DIGITAL SN74LS00N	5431-8600	01295	SN74LS00N
U 21	ICD SN74S04N 14D HEX INVERTER	5431-8407	01295	SN74S04N
U 22	IC DIGITAL SN74LS174N	5431-8774	01295	SN74LS174N
U 23	IC DIGITAL SN74LS174N	5431-8774	01295	SN74LS174N
U 24	IC DIGITAL SN74LS174N	5431-8774	01295	SN74LS174N
U 25	IC DIGITAL SN74LS174N	5431-8774	01295	SN74LS174N
U 26	IC DIGITAL SN74LS174N	5431-8774	01295	SN74LS174N
U 27	IC DIGITAL SN74LS174N	5431-8774	01295	SN74LS174N
U 28	ICD 9311 24D MSI 10F16 DECODER	5431-9617	18324	9311/74154
U 29	IC CRYSTAL OSC 16.0000MHZ .01PCT	5434-0202	04713	K1100A 16.0000MHZ
U 30	IC DIGITAL SN74LS161N	5431-8761	01295	SN74LS161N

ELECTRICAL PARTS LIST (cont)

ANALOG & CONTROL PC BOARD ASM MB P/N 1687-4700

REFDES		DESCRIPTION	PART NO.	FMC	MFGR PART NUMBER
U	31	IC DIGITAL SN74LS86N	5431-8686	01295	SN74LS86N
U	32	IC DIGITAL SN74LS00N	5431-8600	01295	SN74LS00N
U	33	IC DIGITAL SN74LS161N	5431-8761	01295	SN74LS161N
U	34	IC DIGITAL SN74LS02N	5431-8602	01295	SN74LS02N
U	35	IC DIGITAL SN74LS02N	5431-8602	01295	SN74LS02N
U	36	ICD SN74S04N 14D HEX INVERTER	5431-8407	01295	SN74S04N
U	37	IC DIGITAL SN74LS161N	5431-8761	01295	SN74LS161N
U	38	IC DIGITAL SN74LS74N	5431-8674	01295	SN74LS74N
U	39	ICD SN74S174N QUAD D FLI-FLO CLR	5431-8574	01295	SN74S174N
U	40	ICD SN74S112N 16D JK EDTR FLIFLO	5431-8404	01295	SN74S112N
U	41	IC LINEAR LM733CN	5432-1067	12040	LM733CN
Z	1	RESISTOR NETWORK 5.6K 5PCT	6741-0104	24655	6741-0104
Z	2	RESISTOR NETWORK	1657-0810	24655	1657-0810
Z	3	RESISTOR NETWORK	1657-0810	24655	1657-0810
Z	4	RESISTOR NETWORK	1657-0810	24655	1657-0810
Z	5	RESISTOR NETWORK	1657-0810	24655	1657-0810

RESISTANCE IS IN OHMS, K=10^3, M=10^6
CAPACITANCE IS IN FARADS, μ=10^{-6}, p=10^{-12}
VOLTAGES EXPLAINED IN INSTRUCTION BOOK SERVICE NOTES
PANEL CONTROL ; REAR CONTROL
SCREWDRIVER CONTROL. WT=WIRE TIE. TP=TEST POINT.
COMPLETE REFERENCE DESIGNATION INCLUDES SUBASSEMBLY LETTER, C-A1, B-A1, ETC.

CONNECTIONS
- OUTPUT LEAVES SUBASSEMBLY
- INPUT FROM DIFFERENT SUBASSEMBLY
- OUTPUT REMAINS ON SUBASSEMBLY
- INPUT FROM SAME SUBASSEMBLY

U10, PIA — MC 6820 — DIG CNT CB2, PBØ PB1 PB2 PB3; BCD PB4 PB5 PB6 PB7; PAØ PA1 PA2 PA3; PA4 PA5 PA6 PA7

U11, PIA — MC 6820AP — PAØ PA1 PA2 PA3; PA4 PA5 PA6 PA7; PBØ PB1 PB2 PB3 PB4 PB5 PB6 PB7 CB2

TEST PT. J1-20

TEST PT J1-26

TEST PT J1-46

>2μS

CTR RESET-L

U7 74LS14N

+5D

U20,3 U14,8 MSR-L 16 MHZ

U6 SN74LS02N

U6 SN74LS02N

U2 SN74LS93

U3 SN74LS93

U4 SN74LS93

U5 MC14024CD

C31 0.1μF

C32 0.1μF

C33 0.1μF

C23 0.1μF

R8 3.3K

R7 3.3K

MEASURE COUNTER

R 3.0K ×4

D J1-10
C J1-8
B J1-2
A J1-4

Z1,1 +5D

5.6K R37; 5.6K ×4

Z1,9 Z1,8 Z1,7 Z1,6

U28 9311DC DECODER

+5D

C30 0.1μF

G1 G2 AØ A1 A2 A3

VCC GND

DIG Ø J1-38
DIG 1 J1-32
DIG 2 J1-30
DIG 3 J1-28
DIG 4 J1-50
DIG 5 J1-48
DIG 6 J1-42
DIG 7 J1-40
DIG 8 J1-6

TO DISPLAY (SEE FIGURE 6-9.)

Z1,2 Z1,3 Z1,4 Z1,5

5.6K ×4

+5D

STROBE 9
STROBE 10
STROBE 11
STROBE 12
STROBE 13
STROBE 14

CONNECTIONS TO U22 _ _ _ _ _ U27

Figure 6-6. Main (MB) board, 1687-4700, measurement counter, display driver.

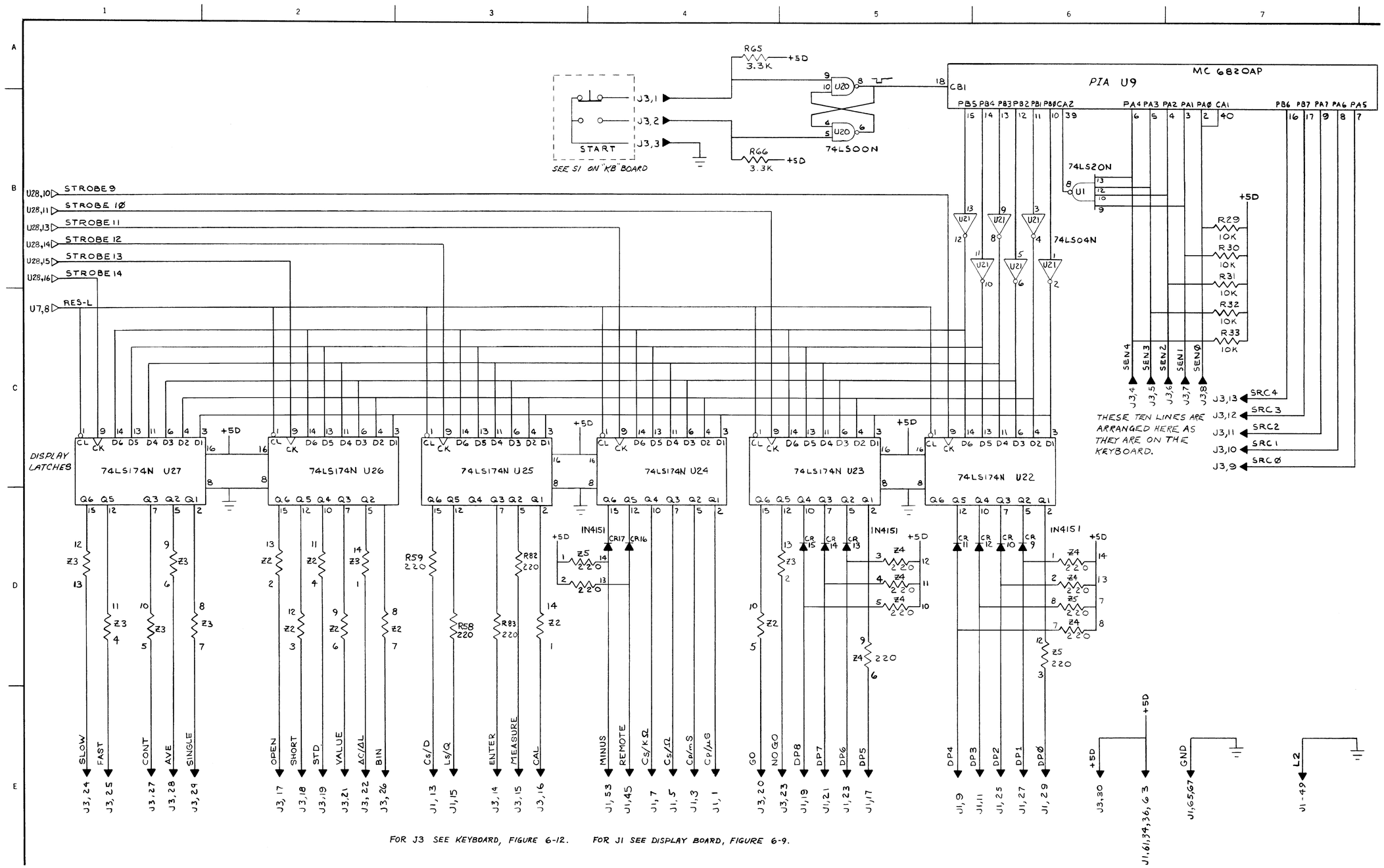

FOR J3 SEE KEYBOARD, FIGURE 6-12. FOR J1 SEE DISPLAY BOARD, FIGURE 6-9.

Figure 6-7. Main (MB) board, 1687-4700, keyboard and display-LED interfaces.

ELECTRICAL PARTS LIST

DISPLAY BOARD ASM DB P/N 1658-4715

REFDES		DESCRIPTION	PART NO.	FMC	MFGR PART NUMBER
C	46	CAP CER MONO 0.1UF 20PCT 50VGP	4400-2050	72982	8131-M050-651-104M
CR	3	LED RED MV5023	6084-1104	71744	CM4-23
CR	4	LED RED MV5023	6084-1104	71744	CM4-23
CR	5	LED RED MV5023	6084-1104	71744	CM4-23
CR	6	LED RED MV5023	6084-1104	71744	CM4-23
CR	7	LED RED MV5023	6084-1104	71744	CM4-23
CR	8	LED RED MV5023	6084-1104	71744	CM4-23
CR	9	LED RED MV5023	6084-1104	71744	CM4-23
CR	10	LED RED MV5023	6084-1104	71744	CM4-23
CR	11	LED RED MV5023	6084-1104	71744	CM4-23
CR	12	LED RED MV5023	6084-1104	71744	CM4-23
CR	13	LED RED MV5023	6084-1104	71744	CM4-23
CR	16	LED RED	6084-1110	72619	555-3007
CR	17	LED RED	6084-1110	72619	555-3007
CR	18	LED RED MV5023	6084-1104	71744	CM4-23
CR	19	LED RED MV5023	6084-1104	71744	CM4-23
R	142	RES COMP 220 OHM 5PCT 1/4W	6099-1225	81349	RCR07G221J
R	143	RES COMP 220 OHM 5PCT 1/4W	6099-1225	81349	RCR07G221J
R	144	RES COMP 220 OHM 5PCT 1/4W	6099-1225	81349	RCR07G221J
U	47	MC14511CP 7SEG LAT/DECOD DRVR	5431-7037	04713	MC14511CP
U	48	MC14511CP 7SEG LAT/DECOD DRVR	5431-7037	04713	MC14511CP
U	49	MC14511CP 7SEG LAT/DECOD DRVR	5431-7037	04713	MC14511CP
U	50	MC14511CP 7SEG LAT/DECOD DRVR	5431-7037	04713	MC14511CP
U	51	MC14511CP 7SEG LAT/DECOD DRVR	5431-7037	04713	MC14511CP
U	52	MC14511CP 7SEG LAT/DECOD DRVR	5431-7037	04713	MC14511CP
U	53	MC14511CP 7SEG LAT/DECOD DRVR	5431-7037	04713	MC14511CP
U	54	MC14511CP 7SEG LAT/DECOD DRVR	5431-7037	04713	MC14511CP
U	55	MC14511CP 7SEG LAT/DECOD DRVR	5431-7037	04713	MC14511CP
U	56	INDICATOR DIGITAL .300 CHARACTER	5437-1300	28480	5082-7740
U	57	INDICATOR DIGITAL .300 CHARACTER	5437-1300	28480	5082-7740
U	58	INDICATOR DIGITAL .300 CHARACTER	5437-1300	28480	5082-7740
U	59	INDICATOR DIGITAL .300 CHARACTER	5437-1300	28480	5082-7740
U	60	INDICATOR DIGITAL .300 CHARACTER	5437-1300	28480	5082-7740
U	61	INDICATOR DIGITAL .300 CHARACTER	5437-1300	28480	5082-7740
U	62	INDICATOR DIGITAL .300 CHARACTER	5437-1300	28480	5082-7740
U	63	INDICATOR DIGITAL .300 CHARACTER	5437-1300	28480	5082-7740
U	64	INDICATOR DIGITAL .300 CHARACTER	5437-1300	28480	5082-7740
Z	2	RESISTOR NETWORK	1657-0810*	24655	1657-0810
Z	3	RESISTOR NETWORK	1657-0810	24655	1657-0810
Z	4	RESISTOR NETWORK	1657-0810	24655	1657-0810
Z	5	RESISTOR NETWORK	1657-0810	24655	1657-0810
Z	6	RESISTOR NETWORK	1657-0810	24655	1657-0810
Z	7	RESISTOR NETWORK	1657-0810	24655	1657-0810
Z	8	RESISTOR NETWORK	1657-0810	24655	1657-0810
Z	9	RESISTOR NETWORK	1657-0810	24655	1657-0810
Z	10	RESISTOR NETWORK	1657-0810	24655	1657-0810

* NOTE: AN OPEN CIRCUIT IN A RESISTOR NETWORK CAN BE REPAIRED BY SHUNTING AN EXTERNAL RESISTOR ACROSS THE APPROPRIATE TERMINALS.
1657-0810 (each section): 220 Ω ± 5%.

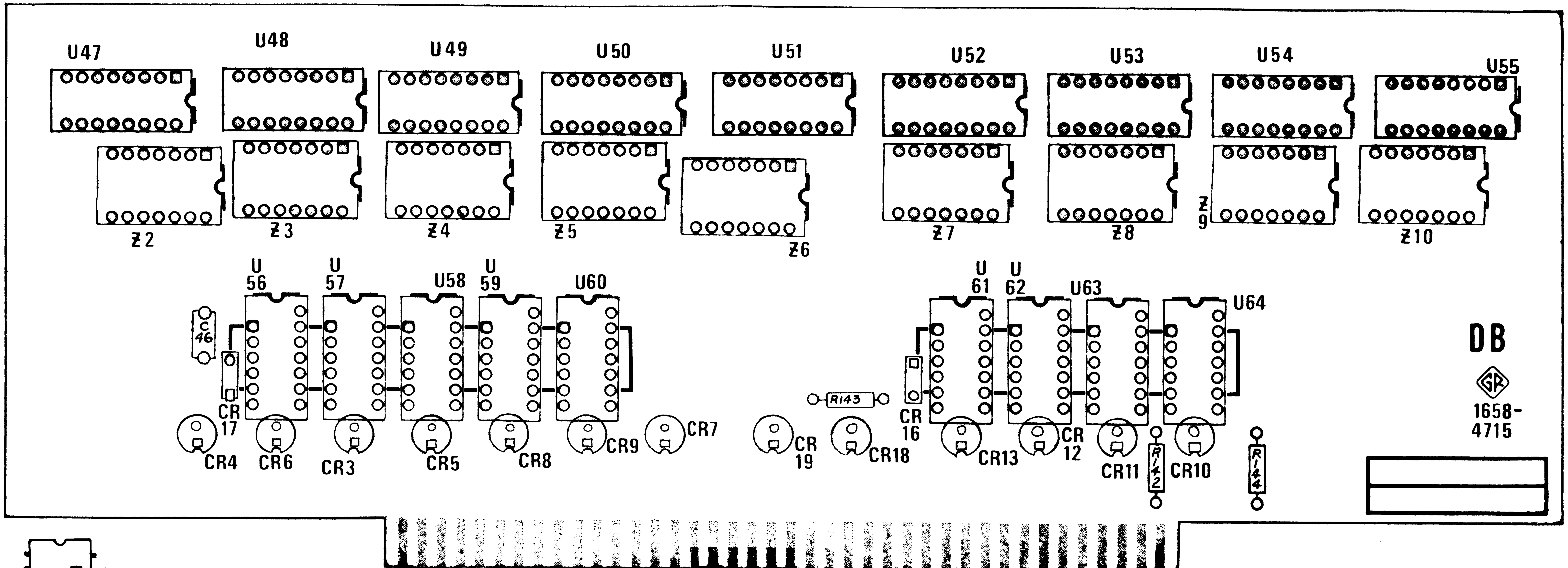

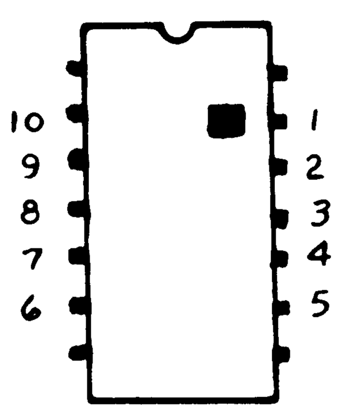

Bottom view
of U56...U64

Front PIN	Front SIG	Rear SIG	Rear PIN
1	L7	B	2
3	L8	A	4
5	L9	DIG8	6
7	L10	C	8
9	DP4	D	10
	DP3, 11		
	RNGRT, 13		
	RNGLFT, 15		
	DP5, 17		
	DP8, 19		
	DP7, 21		
	DP6, 23		
	DP2, 25		
	DP1, 27	DIG3	28
	DP0, 29	DIG2	30
		DIG1	32
		+5D	34
		+5D	36
		DIG0	38
		DIG7	40
		DIG6	42
			44
45	L4		46
47	L1	DIG5	48
49	L2	DIG4	50
51	L3		
53	L6		
55	L5		
	+5D, 61		
	CR10 ANODE, 63		
	GND, 65		
	GND, 67		
75			
77			78
79			80

NOTE: *Orientation:* Viewed from parts side. *Part number:* Refer to caption. *Symbolism:* Outlined area = part; gray ckt pattern = parts side, black (if any) = other side. *Pins:* Square pad in ckt pattern = collector, I-C pin 1, cathode (of diode), or + end (of capacitor).

Figure 6-8. Display (DB) board, 1658-4715, layout.

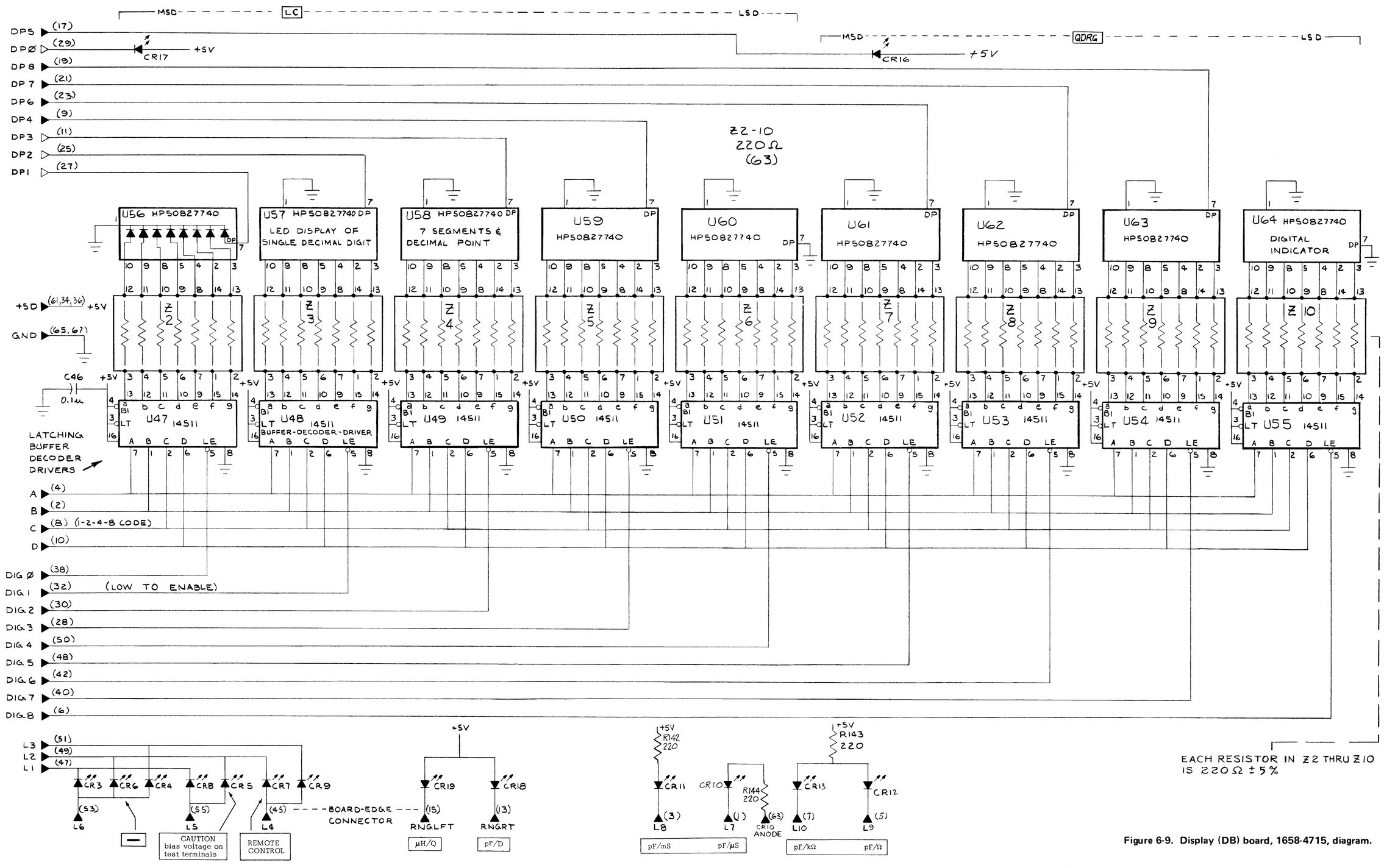

Figure 6-9. Display (DB) board, 1658-4715, diagram.

ELECTRICAL PARTS LIST

KEYBOARD ASM KB P/N 1687-4710

REFDES		DESCRIPTION	PART NO.	FMC	MFGR PART NUMBER
CR	1	LED RED MV5023	6084-1104	71744	CM4-23
CR	2	LED RED MV5023	6084-1104	71744	CM4-23
CR	3	LED RED MV5023	6084-1104	71744	CM4-23
CR	5	LED RED MV5023	6084-1104	71744	CM4-23
CR	6	LED RED MV5023	6084-1104	71744	CM4-23
CR	7	LED RED MV5023	6084-1104	71744	CM4-23
CR	8	LED GREEN	6084-1055	28480	5082-4950
CR	9	LED RED MV5023	6084-1104	71744	CM4-23
CR	10	LED RED MV5023	6084-1104	71744	CM4-23
CR	11	LED RED MV5023	6084-1104	71744	CM4-23
CR	12	LED RED MV5023	6084-1104	71744	CM4-23
CR	13	LED RED MV5023	6084-1104	71744	CM4-23
CR	14	LED RED MV5023	6084-1104	71744	CM4-23
CR	16	LED RED MV5023	6084-1104	71744	CM4-23
CR	17	LED RED MV5023	6084-1104	71744	CM4-23
CR	18	LED RED MV5023	6084-1104	71744	CM4-23
P	1	CONN 30PIN .025SQ POST	4230-8090	30146	929647-08-30
P	10	CONN 6PIN .025SQ POST	4230-8060	30146	929647-08-06
S	1	SWITCH PUSH MOMENT DPST	7870-1571	31918	TYPE SR BLACK
S	10	SWITCH SLIDE 2POS DPDT STEADY	7910-0470	10389	23-021-118
ZS	2	SWITCH PUSHBUTTON MULT KEYBOARD	7880-3200	24655	7880-3200

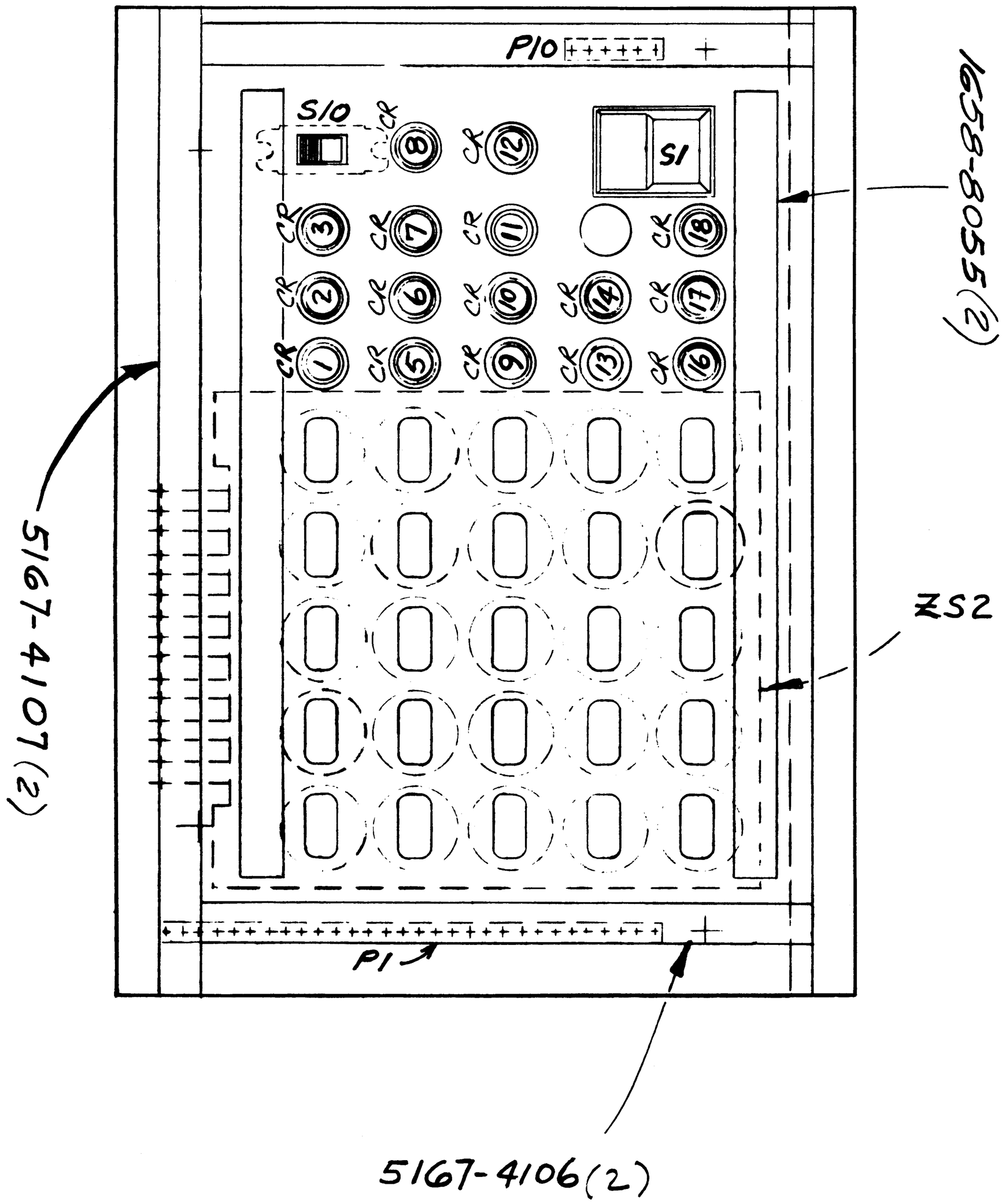

Figure 6-10. Keyboard module assembly, 1687-4200.

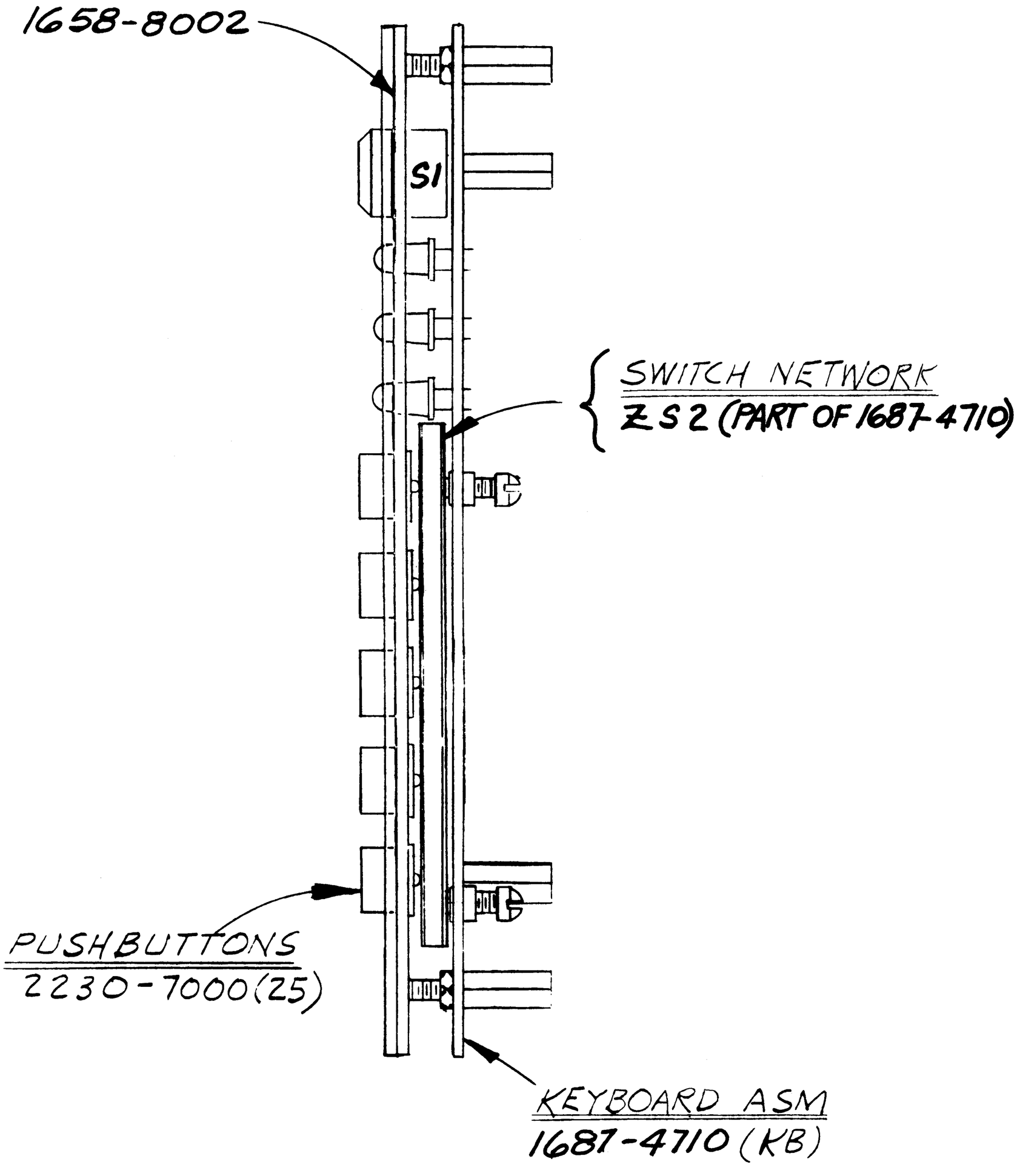

Figure 6-10. Keyboard module assembly, 1687-4200.

6-14c PARTS & DIAGRAMS

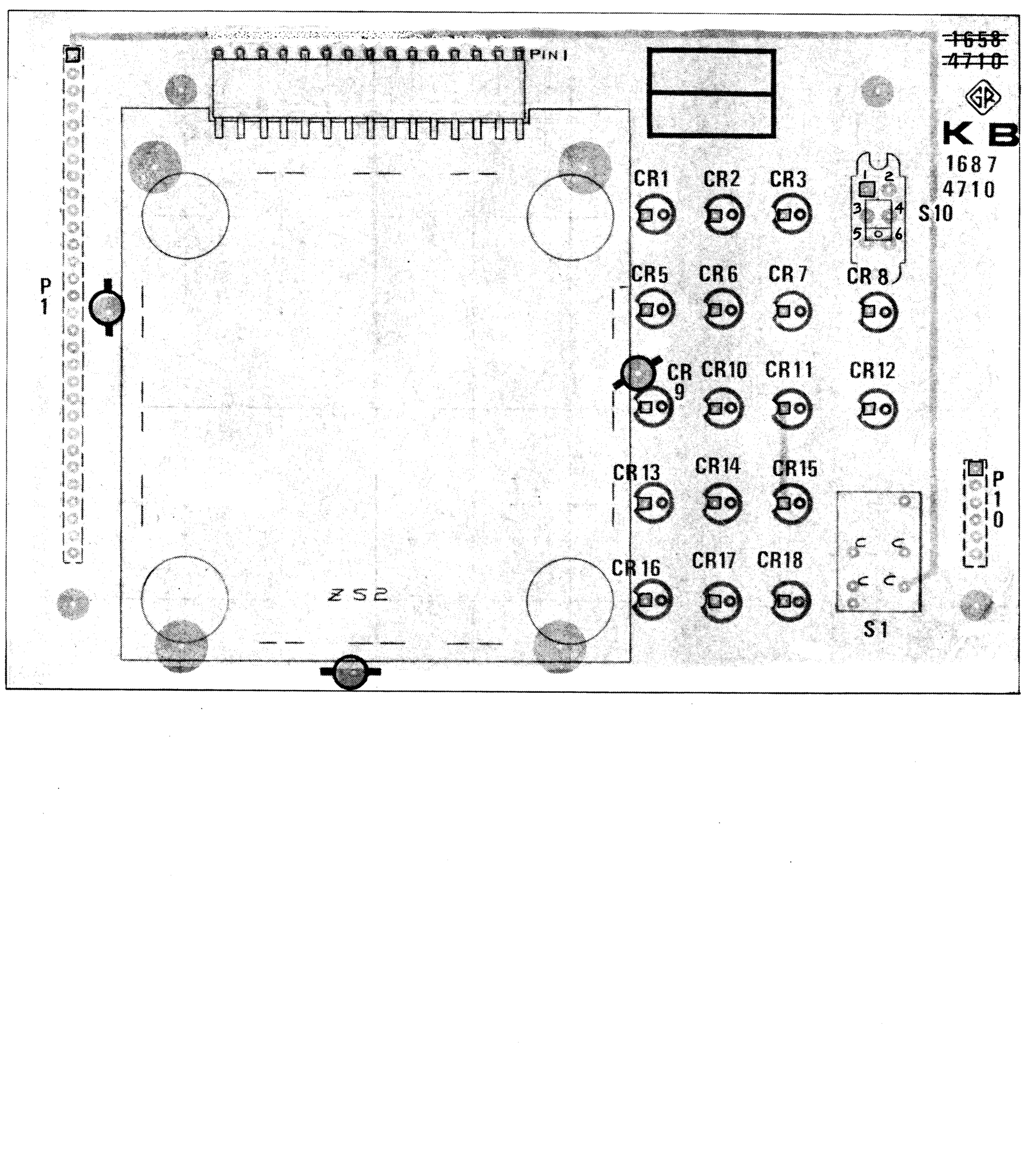

Figure 6-11. Keyboard (KB) circuit board, 1687-4710, layout.

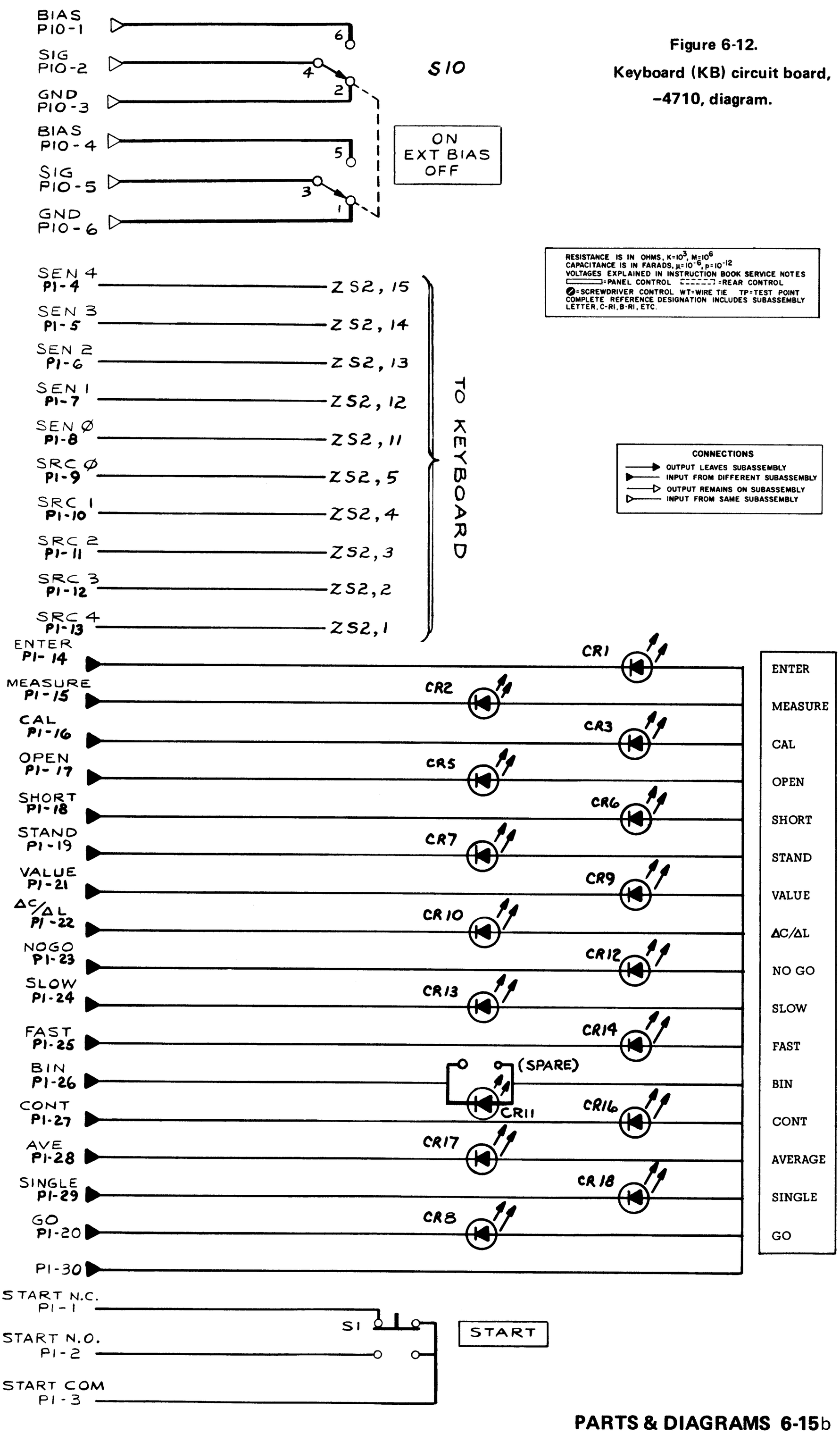

Figure 6-12.
Keyboard (KB) circuit board, –4710, diagram.

ELECTRICAL PARTS LIST

INTERFACE OPTION ASM P/N 1658-4020

REFDES		DESCRIPTION	PART NO.	FMC	MFGR PART NUMBER
J	1	RECPT MICRO RIB 24 CONT	4230-4024	02660	57-40240
J	2	CONN PNL 24FEM CONT MICRO RIB	4230-4824	02660	57-20240-2

NOTE: THIS ASSEMBLY INCLUDES THE 1658-4720 CIRCUIT BOARD; SEE BELOW.

INTERFACE OPTION PC BOARD IOB P/N 1658-4720

REFDES		DESCRIPTION	PART NO.	FMC	MFGR PART NUMBER
C	1	CAP CER MONO 0.1UF 20PCT 50VGP	4400-2050	72982	8131-M050-651-104M
C	2	CAP CER MONO 0.1UF 20PCT 50VGP	4400-2050	72982	8131-M050-651-104M
C	3	CAP CER MONO 0.1UF 20PCT 50VGP	4400-2050	72982	8131-M050-651-104M
C	4	CAP CER MONO 0.1UF 20PCT 50VGP	4400-2050	72982	8131-M050-651-104M
C	5	CAP CER MONO 0.1UF 20PCT 50VGP	4400-2050	72982	8131-M050-651-104M
CR	1	DIODE RECTIFIER 1N4003	6081-1001	14433	1N4003
R	1	RES COMP 3.3 K 5PCT 1/4W	6099-2335	81349	RCR07G332J
R	2	RES COMP 3.3 K 5PCT 1/4W	6099-2335	81349	RCR07G332J
R	3	RES COMP 3.3 K 5PCT 1/4W	6099-2335	81349	RCR07G332J
R	4	RES COMP 3.3 K 5PCT 1/4W	6099-2335	81349	RCR07G332J
R	5	RES COMP 3.3 K 5PCT 1/4W	6099-2335	81349	RCR07G332J
R	6	RES COMP 10 K 5PCT 1/4W	6099-3105	81349	RCR07G103J
R	7	RES COMP 10 K 5PCT 1/4W	6099-3105	81349	RCR07G103J
R	8	RES COMP 3.3 K 5PCT 1/4W	6099-2335	81349	RCR07G332J
R	9	RES COMP 3.3 K 5PCT 1/4W	6099-2335	81349	RCR07G332J
S	2	SWITCH TOGGLE 6STA SPST PC	7910-2030	31514	1006-692
S	12	SWITCH TOGGLE PC 2CKT STEADY	7910-1920	05402	T8001
U	1	ICD MC6820A 40D PIA FOR MPU	5431-2450	04713	MC6820A
U	2	ICD DM8097	5431-9685	12040	DM8097
U	3	ICD DM8097	5431-9685	12040	DM8097
U	4	IC DIGITAL SN74LS04N	5431-8604	01295	SN74LS04N
U	5	ICD MC3441	5431-9684	04713	MC3441
U	6	ICD MC3441	5431-9684	04713	MC3441
U	7	ICD MC3440	5431-9686	04713	MC3440
U	8	ICD MC3441	5431-9684	04713	MC3441
U	9	IC DIGITAL SN74LS02N	5431-8602	01295	SN74LS02N
U	10	ICD SN7406N 14D HX INV COL 30V	5431-8106	01295	SN7406N
U	11	ICD SN7406N 14D HX INV COL 30V	5431-8106	01295	SN7406N
U	12	ICD MC6820A 40D PIA FOR MPU	5431-2450	04713	MC6820A

P2
BOARD-EDGE CONNECTOR

TOP Pin	Signal	BOTTOM Pin	Signal
2	RES-L	1	GND
4	R/W-L	3	GND
6	DØ	5	GND
8	D1	7	GND
10	D2	9	GND
12	RDY	11	GND
14	Ø1	13	OUTSEL1
16	IRQ-L	15	OUTSELØ
18	SYNC	17	+5D
20	+5D	19	+5D
22	AØ	21	NMI-L
24	A1	23	
26	A2	25	
28	A3	27	
30	A4	29	
32	A5	31	Ø2
34	A6	33	
36	A7	35	
38	A8	37	Ø2UB
40	A9	39	A12
42	A10	41	A13
44	A11	43	A14
46	D3	45	A15
48	D4	47	D7
50	D5	49	D6

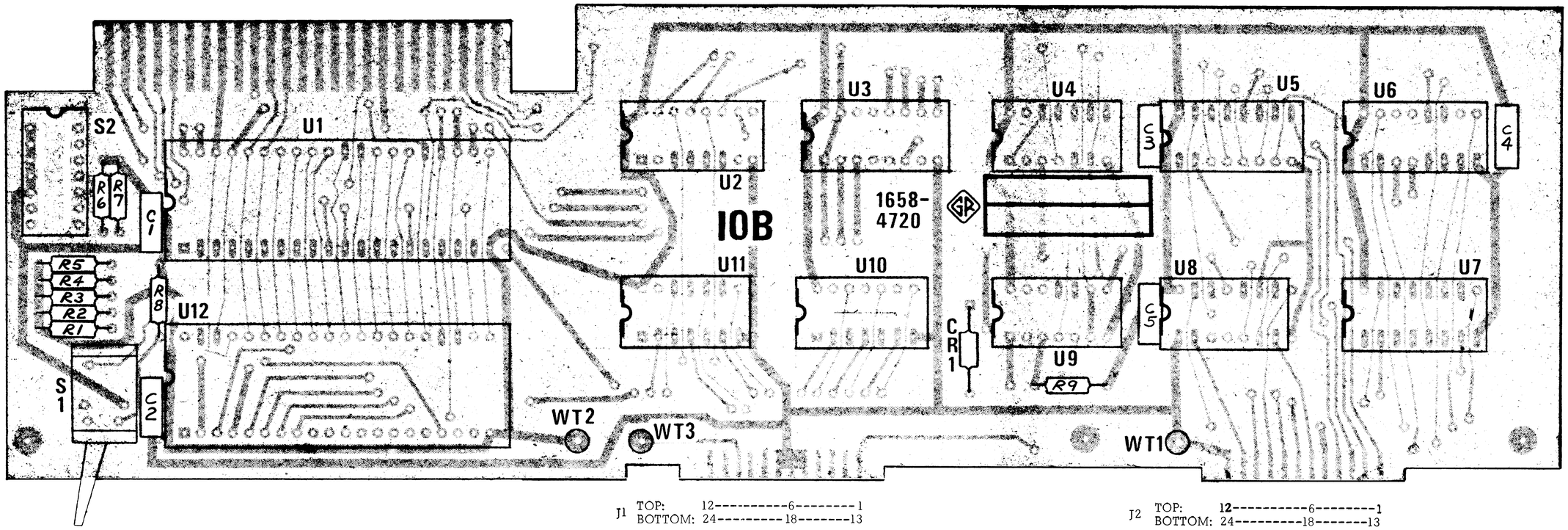

NOTE. ORIENTATION: viewed from parts side.
SYMBOLISM: Solid outlines = component parts.
Gray circuit pattern = this side only.
(■) denotes pin 1 of IC, connector, relay, etc;
+ end of capacitor; cathode of diode; collector
of transistor; and arm or rotor of variable part.
PART NUMBER: refer to figure caption.

Figure 6-13. Interface option (IOB) board, 1658-4720, layout.

NOTE: SIGNAL NAMES WITH BAR ABOVE ARE EQUIVALENT TO THOSE WITH SUFFIX -L. EXAMPLE: $\overline{IRQ}$ IS IRQ-L.

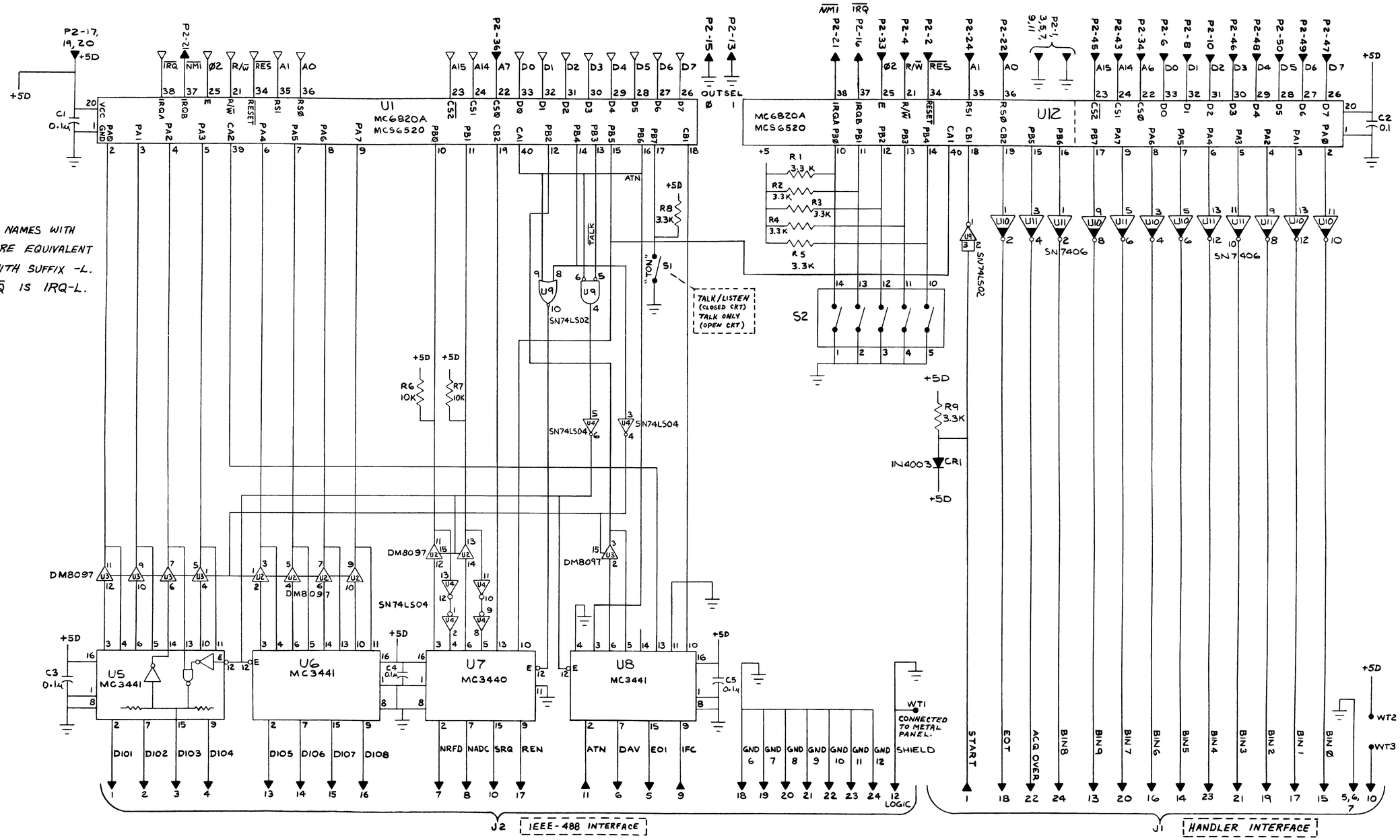

Figure 6-14. Interface option (IOB) board, 1658-4720, diagram.

ELECTRICAL PARTS LIST

POWER SUPPLY ASM V P/N 1658-4000

REFDES		DESCRIPTION	PART NO.	FMC	MFGR PART NUMBER
C	1	CAP ALUM 18000 UF 20V	4450-6231	24655	4450-6231
C	2	CAP ALUM 4500 UF 40V	4450-6221	90201	CGS 4500UF 40V
C	5	CAP TANT 1.0 UF 20PCT 35V	4450-4300	56289	150D105X0035A2
C	6	CAP TANT 1.0 UF 20PCT 35V	4450-4300	56289	150D105X0035A2
CR	1	DIODE BRIDGE	6081-1032	24655	6081-1032
CR	2	DIODE BRIDGE	6081-1032	24655	6081-1032
CR	3	DIODE BRIDGE	6081-1032	24655	6081-1032
CR	4	DIODE BRIDGE	6081-1032	24655	6081-1032
F	1	FUSE SLO-BLOW 1/2A 250V	5330-1000	75915	313 .500
J	101	RECEPTACLE POWER UL STD 15A250V	4240-0250	82389	EAC-302
S	2	SWITCH SLIDE 2 POS DPDT STEADY	7910-0832	82389	11A-1266
T	1	TRANSFORMER POWER	0485-4095	24655	0485-4095
U	1	IC LINEAR LM323	5432-1048	12040	LM323K

NOTE: THIS ASSEMBLY INCLUDES THE 1657-4720 BOARD; SEE BELOW.

POWER SUPPLY PC BOARD P/N 1657-4720

REFDES		DESCRIPTION	PART NO.	FMC	MFGR PART NUMBER
C	3	CAP TANT 1.0 UF 20PCT 35V	4450-4300	56289	150D105X0035A2
C	4	CAP TANT 1.0 UF 20PCT 35V	4450-4300	56289	150D105X0035A2
C	7	CAP TANT 1.0 UF 20PCT 35V	4450-4300	56289	150D105X0035A2
C	8	CAP CER MONO .01 UF 10PCT 50V	4400-6351	72982	8121-M050-W5R-103K
C	9	CAP CER MONO .01 UF 10PCT 50V	4400-6351	72982	8121-M050-W5R-103K
C	10	CAP CER MONO .01 UF 10PCT 50V	4400-6351	72982	8121-M050-W5R-103K
C	11	CAP TANT 1.0 UF 20PCT 35V	4450-4300	56289	150D105X0035A2
CR	5	DIODE RECTIFIER 1N4003	6081-1001	14433	1N4003
CR	6	DIODE RECTIFIER 1N4003	6081-1001	14433	1N4003
CR	7	DIODE RECTIFIER 1N4003	6081-1001	14433	1N4003
CR	8	DIODE RECTIFIER 1N4003	6081-1001	14433	1N4003
CR	9	RECT 1N4140 100PIV 3A SI A1XM	6081-1014	14433	1N4140
CR	10	RECT 1N4140 100PIV 3A SI A1XM	6081-1014	14433	1N4140
S	1	SWITCH PUSH PUSH AC UL 6A	7870-1570	24655	7870-1570
U	2	IC LINEAR LM342P-5	5432-1058	12040	LM342P-5
U	3	IC LINEAR LM320MP-8	5432-1059	12040	LM320MP-8

NOTE: Output terminals of voltage regulators are denoted by square pads.

NOTE. ORIENTATION: viewed from parts side.
SYMBOLISM: Solid outlines = component parts.
Gray circuit pattern = this side only.
(■) denotes pin 1 of IC, connector, relay, etc;
+ end of capacitor; cathode of diode; collector of transistor; and arm or rotor of variable part.
PART NUMBER: refer to figure caption.

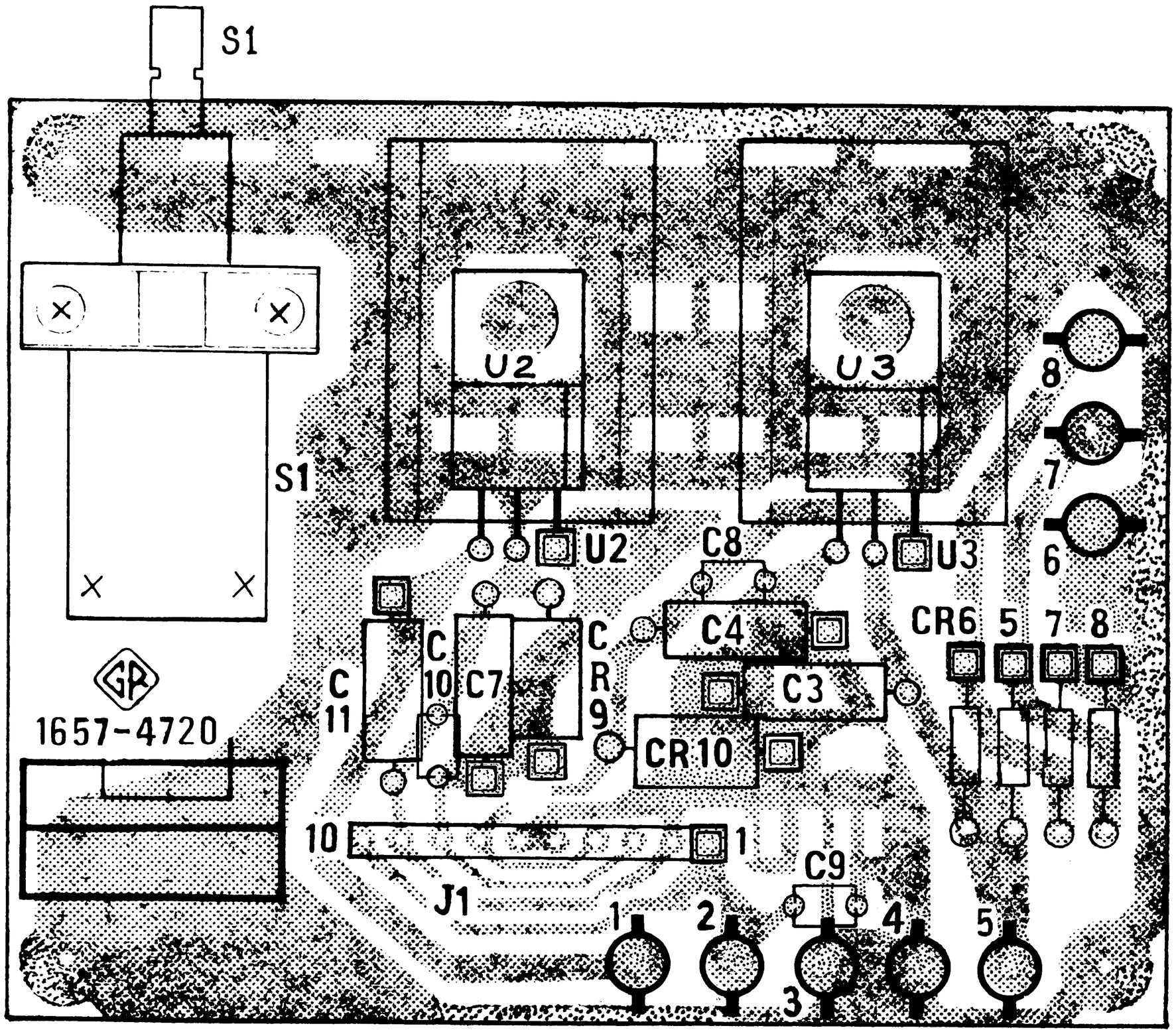

Figure 6-15. Power supply (V) board, 1657-4720, layout.

Figure 6-16. Power supply (V) assembly, 1658-4000, diagram.

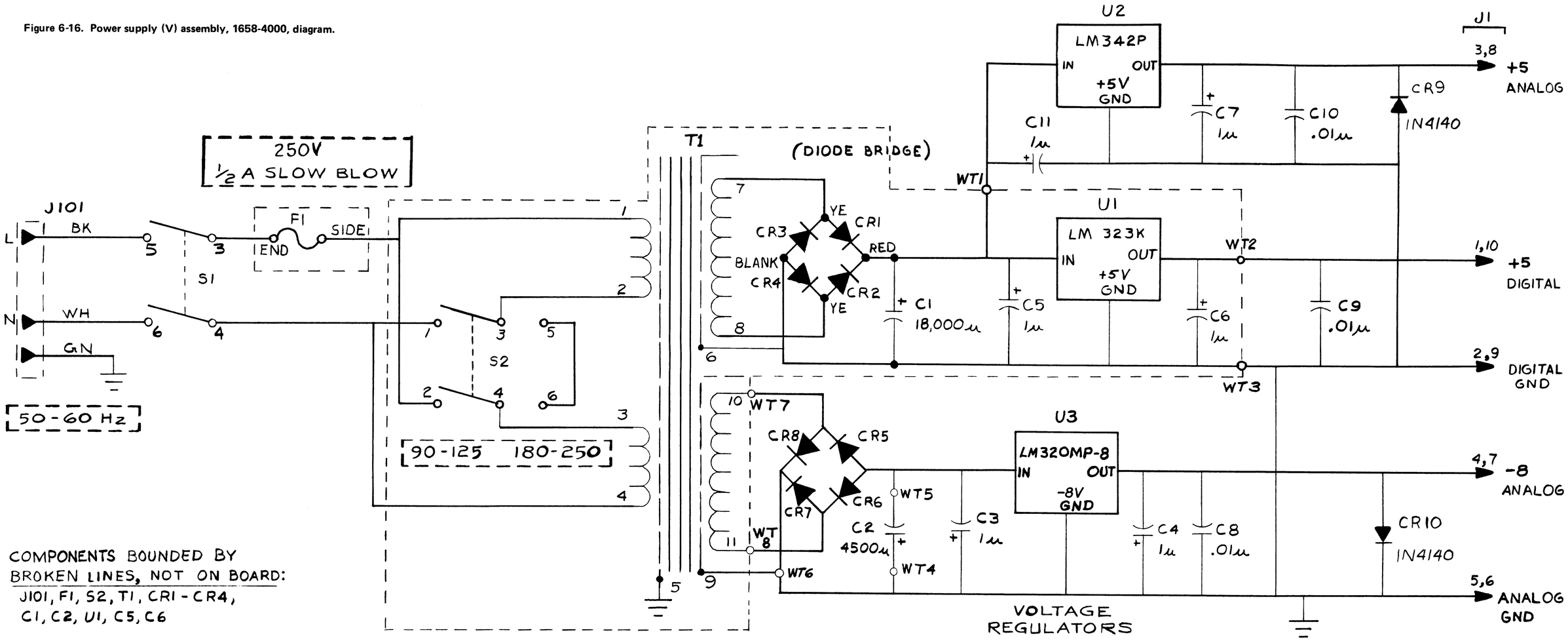

COMPONENTS BOUNDED BY BROKEN LINES, NOT ON BOARD:
J101, F1, S2, T1, CR1 - CR4, C1, C2, U1, C5, C6

CONNECTIONS

- OUTPUT LEAVES SUBASSEMBLY
- INPUT FROM DIFFERENT SUBASSEMBLY
- OUTPUT REMAINS ON SUBASSEMBLY
- INPUT FROM SAME SUBASSEMBLY

RESISTANCE IS IN OHMS, K=10^3, M=10^6
CAPACITANCE IS IN FARADS, µ=10^{-6}, p=10^{-12}
VOLTAGES EXPLAINED IN INSTRUCTION BOOK SERVICE NOTES
▭=PANEL CONTROL ⬚=REAR CONTROL
⊘=SCREWDRIVER CONTROL WT=WIRE TIE TP=TEST POINT
COMPLETE REFERENCE DESIGNATION INCLUDES SUBASSEMBLY LETTER, C-R1, B-R1, ETC.

U1
LM323K

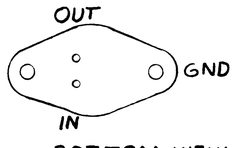

BOTTOM VIEW

U2
LM342P-5

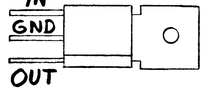

TOP VIEW

U3
LM320MP-8

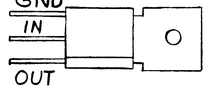

TOP VIEW

ELECTRICAL PARTS LIST

TEST FIXTURE PC BOARD ASM P/N 1687-4730

REFDES		DESCRIPTION	PART NO.	FMC	MFGR PART NUMBER
P	1	CONNECTOR ASM	1687-1811	24655	1687-1811
R	1	RES COMP 10 OHM 5PCT 1/4W	6099-0105	81349	RCR07G100J
R	2	RES COMP 10 OHM 5PCT 1/4W	6099-0105	81349	RCR07G100J

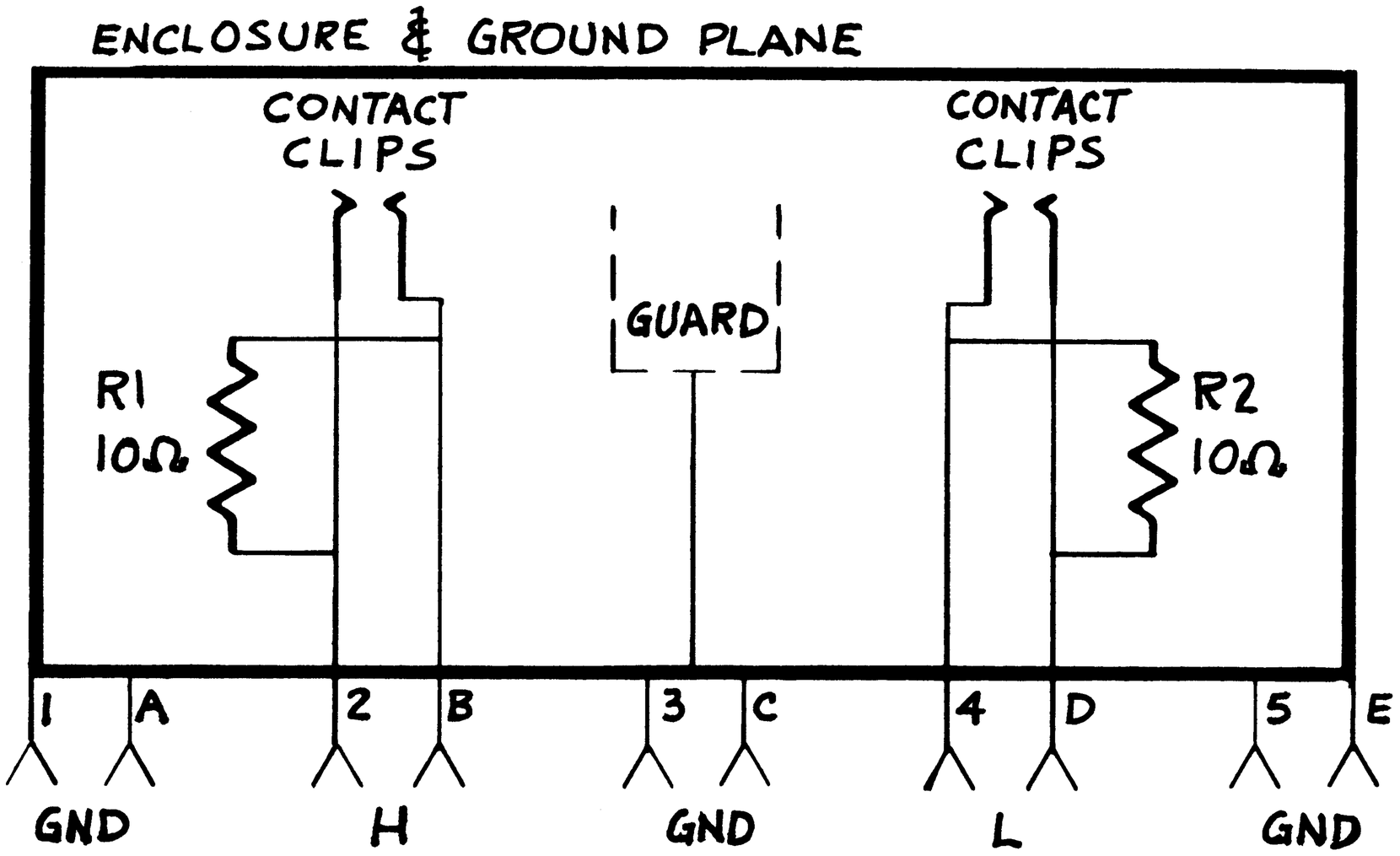

Figure 6-17. Test fixture 1687-9600 (circuit board –4730), diagram.

ELECTRICAL PARTS LIST

PROBE CABLE ASM II P/N 1687-4310* (1 V)

REFDES		DESCRIPTION	PART NO.	FMC	MFGR PART NUMBER
P	1	PROBE PC BOARD ASM	1687-4795	24655	1687-4795
P	2	RECPT TYPE D 25 CONT	4220-0170	02660	17-90250-15
R	3	RES FLM 11 OHM 1 PCT 1/8W	6250-9110	81349	RN55D11R0F
T	1	CORE WOUND	5000-2687	24655	5000-2687

PROBE PC BOARD ASM P/N 1687-4795

REFDES		DESCRIPTION	PART NO.	FMC	MFGR PART NUMBER
C	1	CAP CER MONO .22 UF 10PCT 100V	4400-6360	72982	8141-M100-W5R-224K
C	2	CAP CER SQ 4.7PF 0.1PF 100V NPO	4410-1233	72982	8111-A100-C0G-4R7
C	3	CAP CER.15SQ 470 PF 5PCT 100V	4400-6496	72982	8111A100Y5F471J
C	4	CAP CER .3 SQ .01 UF 20PCT 100V	4400-6534	72982	8131A100Z5U103M
C	5	CAP CER .3 SQ .01 UF 20PCT 100V	4400-6534	72982	8131A100Z5U103M
C	6	CAP CER .3 SQ .01 UF 20PCT 100V	4400-6534	72982	8131A100Z5U103M
C	7	CAP CER .3 SQ .01 UF 20PCT 100V	4400-6534	72982	8131A100Z5U103M
C	8	CAP CER .1 SQ 47PF 5PCT 100V	4400-6487	72982	8101A100Y5F470J
C	9	CAP CER SQ 10PF 0.1PF 100V NPO	4410-1206	72982	8101A100C0G100
L	1	FERRITE BEAD	5000-1250	02114	56-590-65/4B
Q	1	TRANSISTOR	8210-1288	24655	8210-1288
Q	2	TRANSISTOR	8210-1288	24655	8210-1288
Q	3	TRANSISTOR 2N5179	8210-1195	04713	2N5179
Q	4	TRANSISTOR 2N4957	8210-1284	04713	2N4957
R	1	RES COMP 47 OHM 5PCT 1/8W	6098-0475	81349	RCR05G470J
R	2	RES COMP 47 OHM 5PCT 1/8W	6098-0475	81349	RCR05G470J
R	4	RES COMP 100 K 5PCT 1/8W	6098-4105	81349	RCR05G104J
R	5	RES COMP 33 K 5PCT 1/8W	6098-3335	81349	RCR05G333J
R	6	RES COMP 4.7 OHM 5PCT 1/8W	6098-9475	81349	RCR05G4R7J
R	7	RES COMP 330 OHM 5PCT 1/8W	6098-1335	81349	RCR05G331J
R	8	RES COMP 200 OHM 5PCT 1/4W	6099-1205	81349	RCR07G201J
R	9	RES COMP 4.7 OHM 5PCT 1/8W	6098-9475	81349	RCR05G4R7J
R	10	RES FLM 1K .02PCT 10PPM	6619-5070	24655	6619-5070

*Includes the circuit board shown in the accompanying list.

ELECTRICAL PARTS LIST

PROBE CABLE ASM I P/N 1687-4300* (0.1 V)

REFDES		DESCRIPTION	PART NO.	FMC	MFGR PART NUMBER
P	1	PROBE PC BOARD ASM	1687-4790	24655	1687-4790
P	2	RECPT TYPE D 25 CONT	4220-0170	02660	17-90250-15
T	1	CORE WOUND	5000-1687	24655	5000-1687

PROBE PC BOARD ASM P/N 1687-4790

REFDES		DESCRIPTION	PART NO.	FMC	MFGR PART NUMBER
C	1	CAP CER MONO .22 UF 10PCT 100V	4400-6360	72982	8141-M100-W5R-224K
C	2	CAP CER .2SQ 1000PF 5PCT 100V	4400-2139	72982	8121A100Y5F102J
C	3	CAP CER.15SQ 470 PF 5PCT 100V	4400-6496	72982	8111A100Y5F471J
C	4	CAP CER .3 SQ .01 UF 20PCT 100V	4400-6534	72982	8131A100Z5U103M
C	5	CAP CER .3 SQ .01 UF 20PCT 100V	4400-6534	72982	8131A100Z5U103M
C	6	CAP CER .3 SQ .01 UF 20PCT 100V	4400-6534	72982	8131A100Z5U103M
C	7	CAP CER .3 SQ .01 UF 20PCT 100V	4400-6534	72982	8131A100Z5U103M
C	8	CAP CER .1 SQ 47PF 5PCT 100V	4400-6487	72982	8101A100Y5F470J
L	1	FERRITE BEAD	5000-1250	02114	56-590-65/48
Q	1	TRANSISTOR	8210-1288	24655	8210-1288
Q	2	TRANSISTOR	8210-1288	24655	8210-1288
Q	3	TRANSISTOR 2N5179	8210-1195	04713	2N5179
Q	4	TRANSISTOR 2N4957	8210-1284	04713	2N4957
R	1	RES COMP 47 OHM 5PCT 1/8W	6098-0475	81349	RCR05G470J
R	2	RES COMP 47 OHM 5PCT 1/8W	6098-0475	81349	RCR05G470J
R	4	RES COMP 100 K 5PCT 1/8W	6098-4105	81349	RCR05G104J
R	5	RES COMP 33 K 5PCT 1/8W	6098-3335	81349	RCR05G333J
R	6	RES COMP 4.7 OHM 5PCT 1/8W	6098-9475	81349	RCR05G4R7J
R	7	RES COMP 330 OHM 5PCT 1/8W	6098-1335	81349	RCR05G331J
R	8	RES COMP 47 OHM 5PCT 1/8W	6098-0475	81349	RCR05G470J
R	9	RES COMP 4.7 OHM 5PCT 1/8W	6098-9475	81349	RCR05G4R7J
R	10	RES FLM 1K .02PCT 10PPM	6619-5070	24655	6619-5070

*Includes the circuit board shown in the accompanying list.

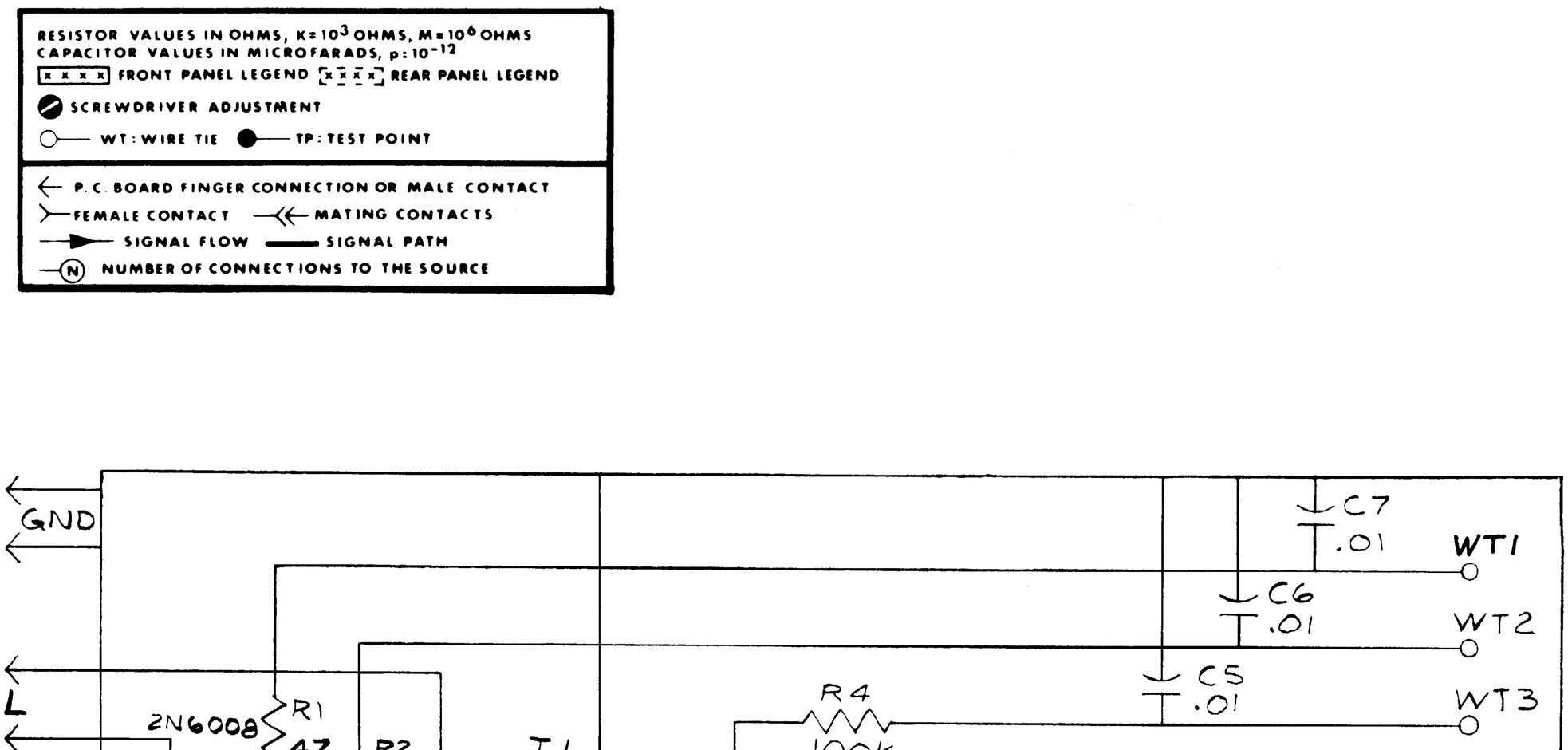

Figure 6-18. High-level probe (1 V) diagram.

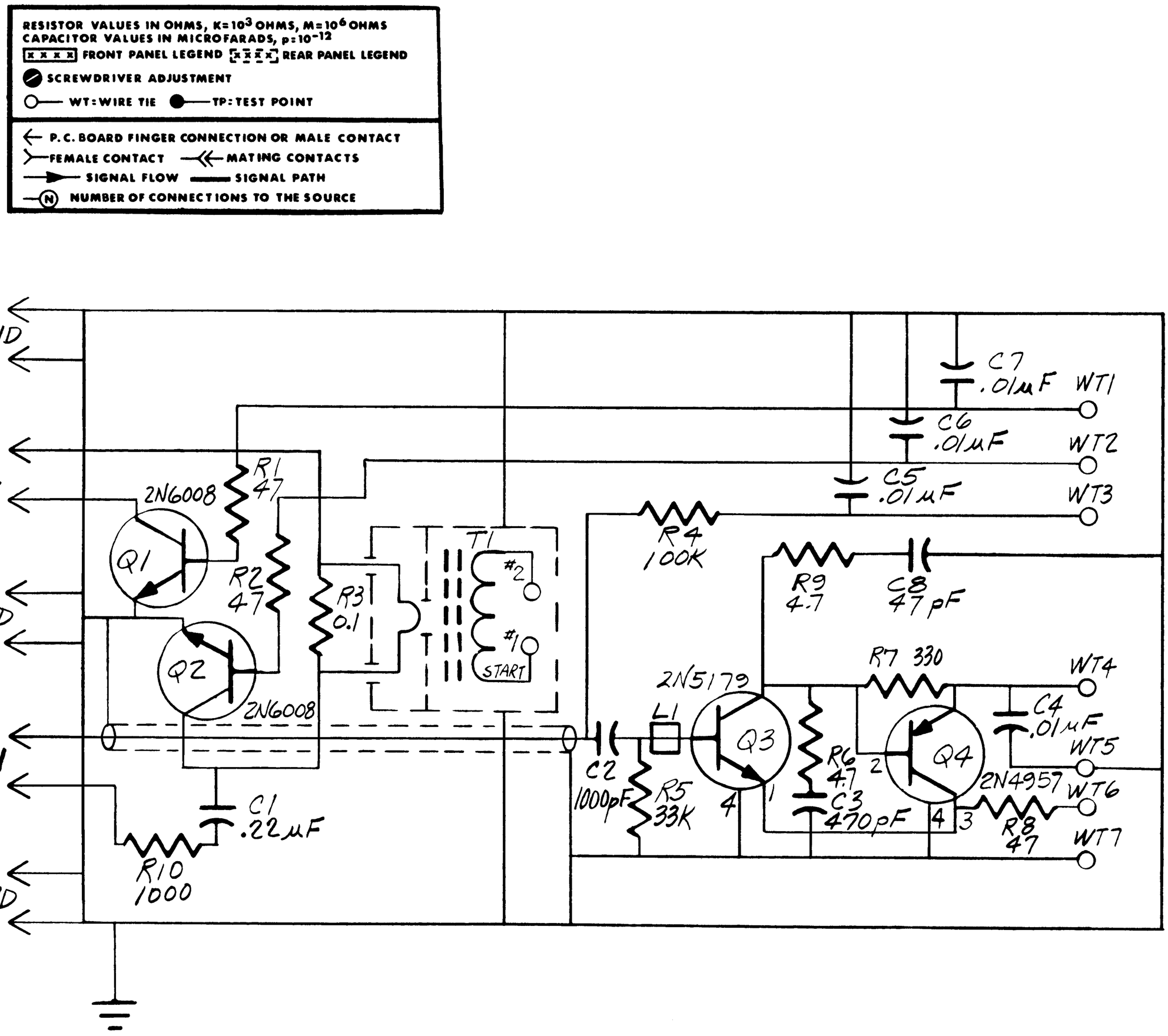

Figure 6-19. Standard probe (0.1 V) diagram.

GenRad

300 Baker Avenue
Concord, Massachusetts 01742

ATLANTA
Alabama, Florida, Georgia, Mississippi, North Carolina, South Carolina, Tennessee
1 Dunwoody Park, Suite 107, Atlanta, GA 30341
Tel: 404/394-5380

***BOSTON**
Connecticut, Maine, Massachusetts, New Hampshire, Rhode Island, Vermont
(SALES)
Route 117, Bolton, MA 01740
Tel: 617/646-0550
(SERVICE)
300 Baker Avenue, Concord, MA 01742
Tel: 617/369-8770 • TWX: 710 347-1051

***CHICAGO**
Illinois, Iowa, Kansas, Minnesota, Missouri, Nebraska, North Dakota, South Dakota, Wisconsin
1067 E. State Parkway, Schaumburg, IL 60195
Tel: 312/884-6900 • TWX: 910 291-1209

DALLAS
Arkansas, Louisiana, Oklahoma, Texas
777 South Central Expressway, Suite 4-A,
Richardson, TX 75080
Tel: 214/234-3357 • TWX: 910 867-4771

DAYTON
Kentucky, Indiana, Michigan, Ohio, Western Pennsylvania
3300 South Dixie Drive, Dayton, OH 45439
Tel: 513/294-1500 • TWX: 810 459-1785

***LOS ANGELES**
Arizona, Hawaii, Nevada (Clark County only), Southern California
P.O. Box 19500, 17361 Armstrong Avenue
Irvine Industrial Complex, Irvine, CA 92714
Tel: 714/540-9830 • TWX: 910 595-1762

***NEW YORK**
Delaware, New Jersey, New York, Eastern Pennsylvania
380 Midland Avenue, Saddle Brook, NJ 07662
Tel: (NJ) 201/791-8990, (NY) 212/964-2722
TWX: 710 988-2205

SAN FRANCISCO
Colorado, Idaho, Montana, Nevada (except Clark County), New Mexico, Northern California, Oregon, Washington, Wyoming, Utah
2855 Bowers Avenue, Santa Clara, CA 95051
Tel: 408/985-0662 • TWX: 910 338-0291
727-4400
Alaska 907/279-5741

***WASHINGTON, DC**
Maryland, Virginia, West Virginia, (Washington, DC)
15 Firstfield Road, Gaithersburg, MD 20760
Tel: 301/948-7071 • TWX: 710 828-9741

CANADA
***GenRad, Ltd.**
307 Evans Avenue, Toronto, Ontario M8Z 1K2
Tel: 416/252-3395 • TELEX: 06-967624
Montreal 514/747-1052
Ottawa Zenith 88630

EUROPE, AFRICA, and NEAR EAST
***GenRad, Ltd.**
Bourne End, Bucks SL8 5 AT, England
Tel: (06285) 2 66 11 • TELEX: 851-848321
***Paris** (01) 797 07 39
***Milano** (02) 20 92 57
***München** (089) 40 18 01
***Zürich** (01) 55 24 20

***ASIA, PACIFIC, and LATIN AMERICA**
GenRad, Marketing & International Division
300 Baker Avenue, Concord, MA 01742
TWX: 710 347-1051 • TELEX: 92-3354
Cable: GENRADCO CONCORD (Mass)

*Service Facilities

Printed in USA

CHANGE
NOTICE

For
Instruction Manual
Form 1687-0120-B (April 1978)
for GR 1687 Megahertz LC Digibridge

This change notice makes a minor change in specifications, adds information, and corrects several typographical errors. Please note the changes listed below and fasten this notice into your manual, at page 2-3, for reference.

page ii — Accuracy...when the optional 1-V probe is used: change from "L: same as above" to:

$$\text{L ACCURACY} = \pm 0.05\%M \left[7 + \frac{L}{500\ \mu H} + \frac{50\ \mu H}{L}\right] \left[1 + 1/Q\right]$$

page iii — Power. Change from "48 to 62 Hz." to: 50 to 60 Hz.

page 1-6 — Table 1-3. Column 2, line 2. Change from "SPH-387" to: SPH-386.

page 2-2 — Figure 2-2. At bottom of figure, change from ".635" to: 6.35.
Para 2.6, just before step a, insert:
1. To supply the desired dc voltage, well filtered.
2. Current limited at 15 mA to 200 mA (max).

page 2-3 — Before para 2.8, insert: For timing information, see change notice that should be fastened here.*
Before para 2.8.1, insert: Refer to CAUTION on page 3-16.

page 2-6 — Before para 2.9, insert: New para 2.8.5 is provided on the change notice that should be fastened at page 2-3.*

page 2-8 — Table 2-5 line 11, under "pF, Picofarads", insert: (space)%, Δ%.

page 3-1 — Column 2, at end of NOTE, append: , at least once a day.

page 3-5 — Para 3.2.6, line 2. Change from "handers" to: handlers.
Para 3.2.6, step c, line 5. Change from "the the" to: the.

page 3-9 — Para 3.4.3, step d. Add: (The displayed number may change very slightly, reflecting use of binary math in the CPU.)

page 3-16 — After para 3.8, insert: CAUTION Be sure Digibridge power is OFF while any connections are made or broken at the IEEE-488 INTERFACE connector or its cable. Otherwise, calibration may be lost.

*Refer to the back of this notice.

GenRad

September 14, 1978
Form No. 1687-0121 300 BAKER AVENUE, CONCORD MASSACHUSETTS 01742 *Printed in U.S.A.*

page 5-4 Table 5-3, column 3, line 5. Change from "1406-9700" to 1405-9700.
Line 6. Change from "1406-9703" to 1405-9703.
Line 20. Change from "2540" to 3500.
After line 3, insert: Adaptor (2 required) GR874® and binding posts GR 0874-9870 (-Q2)

page 5-5 Para 5.5.3, step h. Change from "-Ø.020" to -Ø.085. Change from "Ø.020 (max)" to Ø.085 (max).

page 5-6 Para 5.5.6, step b, line 2. Change "GP" to Gp.
Para 5.5.7, line 6. Add: ; use binding-post adaptors.

page 5-10 Table 5-10, column 5, lines 5 & 6. Change "B10" to B2.

New information that belongs just before para 2.8:

Refer to Figure 2-2A for timing guidelines. Notice that START must have a duration of 1 μs (minimum) in each state (high and low). If START is provided by a mechanical switch without debounce circuitry, the Digibridge will make many false starts; but these will not cause extraneous test-result signals if START is made to settle down (low) within 20 ms (maximum) of the first transition to high.

Measurement starts at time d, which is essentially the same as time b or c; measurement is completed at e. (The START signals are expanded for clarity.) Interval d-e, during which the DUT must remain connected, is 150 ms for FAST or 300 ms for SLOW MEASURE RATE. After interval e-f, which is 50 ms, measurement results are available for sorting, i.e., one of the BIN lines goes low. A few microseconds later, EOT goes low (can be used to set a latch holding the bin assignment). ACQ OVER, the selected BIN line, and EOT then stay low until the next start command.

Be sure the TALK switch is set to TALK ONLY, if the IEEE-488 bus is not used.

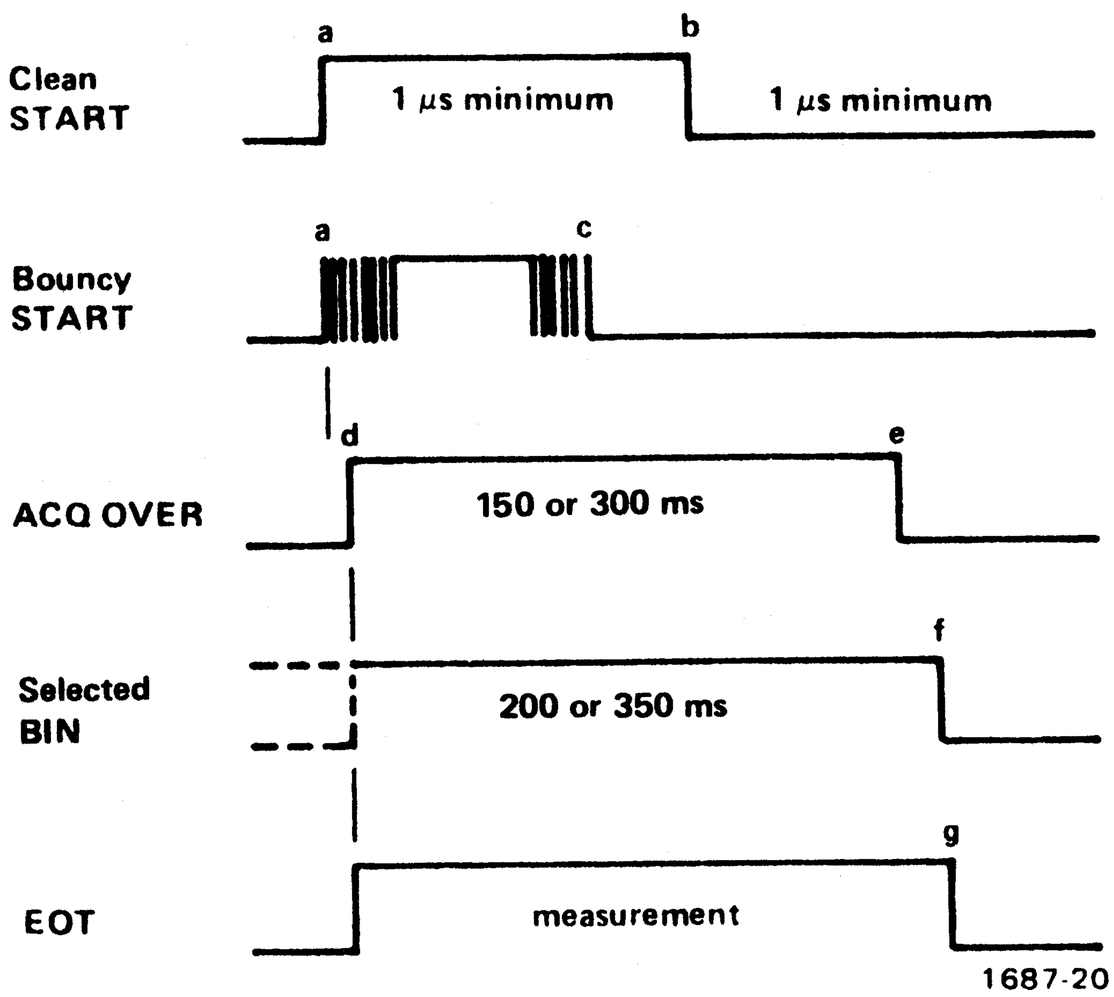

Figure 2-2A. Handler interface timing diagram. External circuitry must keep a—b > 1 μs, b—a > 1 μs, and (if START is not "debounced") a—c < 20 ms. The DUT can be disconnected after "e." The selected "BIN" line goes low at "f"; the others stay high.

New information that belongs just before para 2.9:

2.8.5 Programming Guidelines.

If the Digibridge is to be programmed (TALK switch set to TALK/LISTEN), keep the following suggestions in mind.

1. An "unlisten" command is required before measurement is possible.
2. If not addressed to talk, the Digibridge sends a service request (SRQ low) when it has data ready to send.
3. Then SRQ will not go false (high) until the Digibridge has been addressed to talk or has been serially polled.

A typical program might include these features:

- Initial setup: with ATN true, "untalk, unlisten, my listen address (of Digibridge), my talk address (of CPU)"; then with ATN false, measurement conditions (Table 2-3).
- Measurement-enabling sequence, for example: untalk the Digibridge, send a GET, unlisten the Digibridge.
- After CPU receives the SRQ, necessary enabling of data transfer: with ATN true, "untalk, unlisten, my listen address (of CPU), my talk address (of Digibridge)"; then ATN false.

300 Baker Ave, Concord, MA 01742